COMM AT NW COR OF NE1/4 OF SW1/4
E 601.88 FT TO W R/W LINE US-441
R/W 200 FT FOR POB, W 418 FT, S

MAR-MIC DEVELOPERS LLC
P O BOX 3243
VALDOSTA, GA 31604

2026

05-4S-17-07608-000

COLUMBIA COUNTY PROPERTY

BUILDING CHARACTERISTICS

ELEMENT	CD	CONSTRUCTION
Exterior Wall	19	COMMON BRK 100
Roof Structur	04	WOOD TRUSS 100
Roof Cover	04	BUILT-UP 100
Interior Wall	05	DRYWALL 100
Interior Floo	14	CARPET 90
Interior Floo	08	SHT VINYL 10
Air Condition	03	CENTRAL 100
Heating Type	03	FORCED AIR 100
Bedrooms		2 100
Bathrooms		1.5 100
Frame	02	WOOD FRAME 100
Story Height		8 100
RMS		0 100
Stories	2.	2. 100
Units		12 100
Condition Adj	02	02 100
Kitchen Adjus	01	01 100
Quality	03	03
DOR CODE	0300	MULTI-FAM 10+
MAP NUM		MKT AREA 06
NEIGHBORHOOD/LOC	5417.00	1.00/

AREA TYPE	TOTAL GROSS AREA	PCT OF BASE	YEAR	TOT ADJ AREA	SUBAREA MARKET VALUE
BAS	896	100		896	28,946
BAS	896	100		896	28,946
BAS	1,792	100		1,792	57,891
BAS	1,792	100		1,792	57,891
FOP	308	30		92	2,972
FOP	308	30		92	2,972
FOP	308	30		92	2,972
FOP	308	30		92	2,972
FOP	308	30		92	2,972
FOP	308	30		92	2,972
TOTALS	12,600			11,304	365,176

MARKET ADJUSTMENTS

TYPE	MDL	EFF. AREA	TOT ADJ PTS	EFF. BASE RATE	REPL. COST NEW	AYB	EYB	ECON	FNCT		NORM	% COND
2500	03	11,304	89.7326	64.61	730,351	1967	1967	0	0	0	50.00	50.00

1 M/FAM ROW 0% - 0 Heated Area: 10752 HX Base Yr

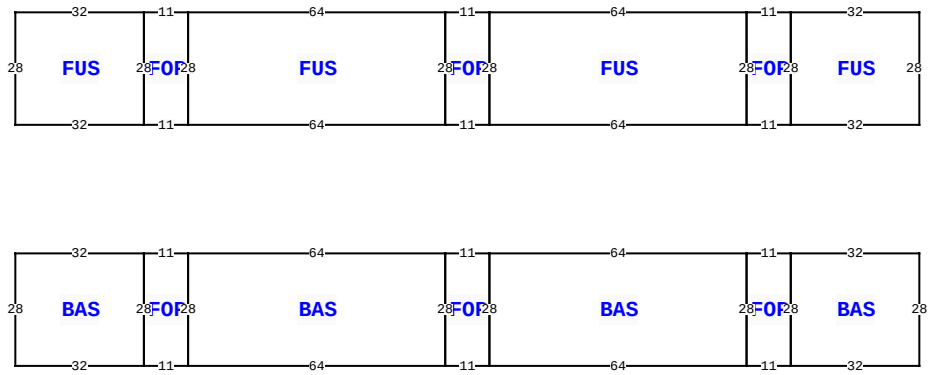

** This building has 14 Sub-Areas

1416 S MARION AVE, LAKE CITY

BLD DATE		LGL DATE	
XF DATE		LAND DATE	
INC DATE		AG DATE	

VALUATION SUMMARY

VALUATION BY	STANDARD
Tax Group: 1	Tax Dist:
BUILDING MARKET VALUE	1,421,052
TOTAL MARKET OB/XF VALUE	25,600
TOTAL LAND VALUE - MARKET	314,503
TOTAL MARKET VALUE	1,761,155
SOH/AGL Deduction	0
ASSESSED VALUE	1,761,155
TOTAL EXEMPTION VALUE	0
BASE TAXABLE VALUE	1,761,155
TOTAL JUST VALUE	1,761,155
NCON VALUE	0
INCOME VALUE	
PREVIOUS YEAR MKT VALUE	1,761,155

BLDG:3:7: NOTE FST ON THIS BLD IS OFFICE/LAUNDRY R

PERMIT NUM	DESCRIPTION	AMT	ISSUED
000046396	Roof Replacement	27,000	01/27/2023
316	REMODEL	50	08/23/2007
3744	REMODEL	115	05/24/2006
034	REMODEL	70	03/22/1994

SALES DATA

OFF RECORD Number	DATE	TYPE INST	Q U	V I	RSN CD	SALE PRICE
1280/2417	8/27/2014	WD	U	I	38	1,053,700
GRANTOR: COLUMBIA ARMS COMMUNI						
GRANTEE: MAR-MIC DEVELOPERS						
1073/0833	1/23/2006	WD	Q	I		2,200,000
GRANTOR: THOUOUGHBRED PROPERTY						
GRANTEE: COLUMBIA ARMS COMMU						

BUILDING NOTES

BUILDING DIMENSIONS

BAS= W32 FOP= W11 BAS= W64 FOP= W11 BAS= W64 FOP= W11 BAS= W32 S28 E32 N28$ S28 E11N28$ S28 E64 N28$ S28 E11 N28$S28 E64 N28$ S28 E11 N28$ S28 E32 N28$PTR=N60 FUS= W32 FOP= W11 FUS= W64 FOP= W11 FUS= W64 FOP= W11 FUS= W32 S28 E32 N28$ S28 E11 N28 $S28 E64 N28$ S28 E11 N28$ S28 E64 N28$ S28 E11 N28$ S28 E32 N28$S60$.

EXTRA FEATURES

LN	OB/XF CODE	DESCRIPTION	BLD	CAP	L	W	UNITS	UT	Adj R	ADJ UNIT PRICE	ORIG COND	YEAR ON	YEAR ACTUAL	Q	% COND	OB/XF MKT VALUE	NOTES
1	0166	CONC,PAVMT	0	0	0	0	1.00	UT	14,000.00	14,000.00	50	0	0	3	50	7,000	
2	0260	PAVEMENT-A	0	0	800	40	32,000.00	UT	1.10	1.10	50	2003	2003	3	50	17,600	
3	0120	CLFENCE 4	0	0	0	0	1.00	UT	0.00	0.00	100	1993	1993	3	100	500	
4	0166	CONC,PAVMT	0	0	0	0	1.00	UT	500.00	500.00	100	2022	2021		100	500	

LAND DESCRIPTION

TOTAL OB/XF 25,600

LN	USE CODE	CLS	LAND USE DESCRIPTION	CAP	RD	LOC ZONE	FRONT	DEPTH	TOT LND UTS	UNIT TYPE	DT	DPTH FACT	% COND	TOT ADJ	UNIT PRICE	ADJ UNIT PRICE	LAND VALUE	OTHER ADJUSTMENTS AND NOTES	YEAR	DENSITY	DECL	FRZ	YR	CONSRV
1	0300	C	MULTI-FAM	0		*RMF-2	418.00	418.00	174,724.00	SF		1.00	1.00	0.80	2.25	1.80	314,503							

REVIEW DATE 12/02/2021 BY ME Total Acres: 4.01 Total Land Value: 314,503 Market: 0 Agricultural: 0 Common: 314,503 PRINTED 11/17/2025 BY SYS

COMM AT NW COR OF NE1/4 OF SW1/4
E 601.88 FT TO W R/W LINE US-441
R/W 200 FT FOR POB, W 418 FT, S

MAR-MIC DEVELOPERS LLC
P O BOX 3243
VALDOSTA, GA 31604

2026

05-4S-17-07608-000

COLUMBIA COUNTY PROPERTY

BUILDING CHARACTERISTICS

ELEMENT	CD	CONSTRUCTION
Exterior Wall	19	COMMON BRK 100
Roof Structur	04	WOOD TRUSS 100
Roof Cover	04	BUILT-UP 100
Interior Wall	05	DRYWALL 100
Interior Floo	14	CARPET 90
Interior Floo	08	SHT VINYL 10
Air Condition	03	CENTRAL 100
Heating Type	03	FORCED AIR 100
Bedrooms		2 100
Bathrooms		1.5 100
Frame	02	WOOD FRAME 100
Story Height		8 100
RMS		0 100
Stories	2.	2. 100
Units		12 100
Condition Adj	02	02 100
Kitchen Adjus	01	01 100
Quality	03	03
DOR CODE	0300	MULTI-FAM 10+
MAP NUM		MKT AREA 06
NEIGHBORHOOD/LOC	5417.00	1.00/

AREA TYPE	TOTAL GROSS AREA	PCT OF BASE	YEAR	TOT ADJ AREA	SUBAREA MARKET VALUE
BAS	896	100		896	28,946
BAS	896	100		896	28,946
BAS	1,792	100		1,792	57,891
BAS	1,792	100		1,792	57,891
FOP	308	30		92	2,972
FOP	308	30		92	2,972
FOP	308	30		92	2,972
FOP	308	30		92	2,972
FOP	308	30		92	2,972
FOP	308	30		92	2,972
TOTALS	12,600			11,304	365,176

MARKET ADJUSTMENTS

TYPE	MDL	EFF. AREA	TOT ADJ PTS	EFF. BASE RATE	REPL. COST NEW	AYB	EYB	ECON	FNCT		NORM	% COND
2500	03	11,304	89.7326	64.61	730,351	1967	1967	0	0	0	50.00	50.00

2 M/FAM ROW 0% - 0 Heated Area: 10752 HX Base Yr

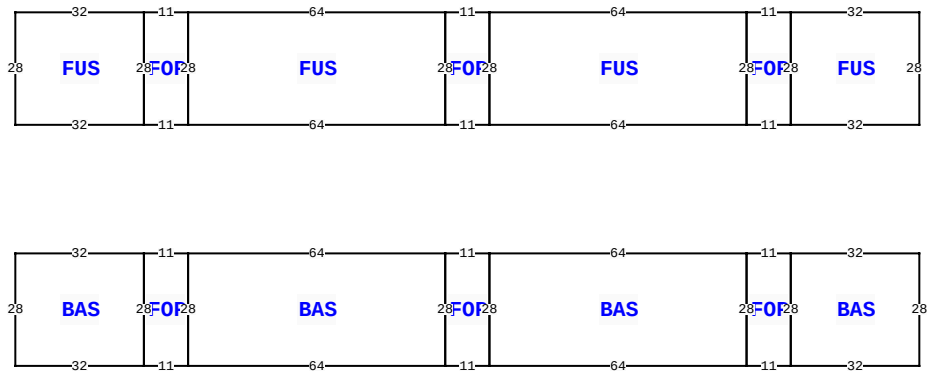

** This building has 14 Sub-Areas

1416 S MARION AVE, LAKE CITY

BLD DATE		LGL DATE	
XF DATE		LAND DATE	
INC DATE		AG DATE	

VALUATION SUMMARY

VALUATION BY	STANDARD
Tax Group: 1	Tax Dist:
BUILDING MARKET VALUE	1,421,052
TOTAL MARKET OB/XF VALUE	25,600
TOTAL LAND VALUE - MARKET	314,503
TOTAL MARKET VALUE	1,761,155
SOH/AGL Deduction	0
ASSESSED VALUE	1,761,155
TOTAL EXEMPTION VALUE	0
BASE TAXABLE VALUE	1,761,155
TOTAL JUST VALUE	1,761,155
NCON VALUE	0
INCOME VALUE	
PREVIOUS YEAR MKT VALUE	1,761,155

PERMIT NUM	DESCRIPTION	AMT	ISSUED

SALES DATA

OFF RECORD Number	DATE	TYPE INST	Q / U	V / I	RSN CD	SALE PRICE
1280/2417	8/27/2014	WD	U	I	38	1,053,700
GRANTOR: COLUMBIA ARMS COMMUNI						
GRANTEE: MAR-MIC DEVELOPERS						
1073/0833	1/23/2006	WD	Q	I		2,200,000
GRANTOR: THOUOUGHBRED PROPERTY						
GRANTEE: COLUMBIA ARMS COMMU						

BUILDING NOTES

BUILDING DIMENSIONS

BAS= W32 FOP= W11 BAS= W64 FOP= W11 BAS= W64 FOP= W11 BAS= W32 S28 E32 N28$ S28 E11N28$ S28 E64 N28$ S28 E11 N28$S28 E64 N28$S28 E11 N28$ S28 E32 N28$ PTR=N60 FUS= W32 FOP= W11 FUS= W64 FOP= W11 FUS= W64 FOP= W11 FUS= W32 S28 E32 N28$ S28 E11 N28$ S28 E64 N28$ S28 E11 N28$ S28 E64 N28$ S28 E11 N28$ S28 E32 N28$S60$.

EXTRA FEATURES

LN	OB/XF CODE	DESCRIPTION	BLD	CAP	L	W	UNITS	UT	Adj R	ADJ UNIT PRICE	ORIG COND	YEAR ON	YEAR ACTUAL	Q	% COND	OB/XF MKT VALUE	NOTES

LAND DESCRIPTION

TOTAL OB/XF 0

LN	USE CODE	CLS	LAND USE DESCRIPTION	CAP	RD	LOC ZONE	FRONT	DEPTH	TOT LND UTS	UNIT TYPE	DT	DPTH FACT	% COND	TOT ADJ	UNIT PRICE	ADJ UNIT PRICE	LAND VALUE	OTHER ADJUSTMENTS AND NOTES	YEAR	DENSITY	DECL	FRZ	YR	CONSRV

REVIEW DATE 12/02/2021 BY ME Total Acres: 4.01 Total Land Value: 314,503 Market: 0 Agricultural: 0 Common: 314,503 PRINTED 11/17/2025 BY SYS

COMM AT NW COR OF NE1/4 OF SW1/4
E 601.88 FT TO W R/W LINE US-441
R/W 200 FT FOR POB, W 418 FT, S

MAR-MIC DEVELOPERS LLC
P O BOX 3243
VALDOSTA, GA 31604

2026

05-4S-17-07608-000

COLUMBIA COUNTY PROPERTY

BUILDING CHARACTERISTICS

ELEMENT	CD	CONSTRUCTION
Exterior Wall	19	COMMON BRK 100
Roof Structur	04	WOOD TRUSS 100
Roof Cover	04	BUILT-UP 100
Interior Wall	05	DRYWALL 100
Interior Floo	14	CARPET 90
Interior Floo	08	SHT VINYL 10
Air Condition	03	CENTRAL 100
Heating Type	03	FORCED AIR 100
Bedrooms		1 100
Bathrooms		1 100
Frame	02	WOOD FRAME 100
Story Height		8 100
RMS		0 100
Stories	2.	2. 100
Units		14 100
Condition Adj	02	02 100
Kitchen Adjus	01	01 100
Quality	03	03
DOR CODE	0300	MULTI-FAM 10+
MAP NUM		MKT AREA 06
NEIGHBORHOOD/LOC	5417.00	1.00/

AREA TYPE	TOTAL GROSS AREA	PCT OF BASE	YEAR	TOT ADJ AREA	SUBAREA MARKET VALUE
BAS	728	100		728	22,863
BAS	728	100		728	22,863
BAS	1,456	100		1,456	45,726
BAS	1,456	100		1,456	45,726
BAS	1,456	100		1,456	45,726
FOP	252	30		76	2,387
FOP	252	30		76	2,387
FOP	252	30		76	2,387
FOP	252	30		76	2,387
FOP	252	30		76	2,387
TOTALS	14,314			12,614	396,142

MARKET ADJUSTMENTS

TYPE	MDL	EFF. AREA	TOT ADJ PTS	EFF. BASE RATE	REPL. COST NEW	AYB	EYB	ECON	FNCT		NORM	% COND
2500	03	12,614	87.2386	62.81	792,285	1967	1967	0	0	0	50.00	50.00

3 M/FAM ROW 0% - 0 Heated Area: 11648 HX Base Yr

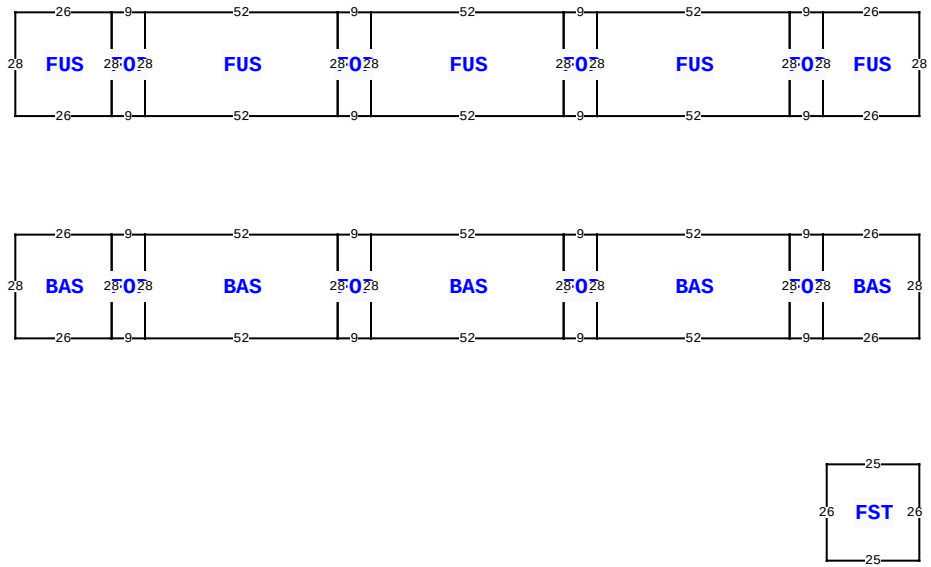

** This building has 19 Sub-Areas

1416 S MARION AVE, LAKE CITY

BLD DATE		LGL DATE	
XF DATE		LAND DATE	
INC DATE		AG DATE	

VALUATION SUMMARY

VALUATION BY	STANDARD
Tax Group: 1	Tax Dist:
BUILDING MARKET VALUE	1,421,052
TOTAL MARKET OB/XF VALUE	25,600
TOTAL LAND VALUE - MARKET	314,503
TOTAL MARKET VALUE	1,761,155
SOH/AGL Deduction	0
ASSESSED VALUE	1,761,155
TOTAL EXEMPTION VALUE	0
BASE TAXABLE VALUE	1,761,155
TOTAL JUST VALUE	1,761,155
NCON VALUE	0
INCOME VALUE	
PREVIOUS YEAR MKT VALUE	1,761,155

PERMIT NUM	DESCRIPTION	AMT	ISSUED

SALES DATA

OFF RECORD Number	DATE	TYPE INST	Q / U	V / I	RSN CD	SALE PRICE
1280/2417	8/27/2014	WD	U	I	38	1,053,700
GRANTOR: COLUMBIA ARMS COMMUNI						
GRANTEE: MAR-MIC DEVELOPERS						
1073/0833	1/23/2006	WD	Q	I		2,200,000
GRANTOR: THOUOUGHBRED PROPERTY						
GRANTEE: COLUMBIA ARMS COMMU						

BUILDING NOTES

BUILDING DIMENSIONS

BAS=[ORIG=-35,0] W52 S28 E52 N28 $
BAS=[ORIG=-96,0] W52 S28 E52 N28 $
BAS=[ORIG=-157,0] W52 S28 E52 N28 $
FUS=[ORIG=-35,-60] W52 S28 E52 N28 $
FUS=[ORIG=-96,-60] W52 S28 E52 N28 $
FUS=[ORIG=-157,-60] W52 S28 E52 N28 $
BAS=[ORIG=0,0] W26 S28 E26 N28 $
BAS=[ORIG=-218,0] W26 S28 E26 N28 $
FUS=[ORIG=0,-32] N28 W26 S28 E26 $
FUS=[ORIG=-218,-60] W26 S28 E26 N28 $
FST=[ORIG=0,88] N26 W25 S26 E25 $
FOP=[ORIG=-26,0] W9 S28 E9 N28 $

EXTRA FEATURES

L N	OB/XF CODE	DESCRIPTION	BLD	CAP	L	W	UNITS	UT	Adj R	ADJ UNIT PRICE	ORIG COND	YEAR ON	YEAR ACTUAL	Q	% COND	OB/XF MKT VALUE	NOTES

LAND DESCRIPTION

TOTAL OB/XF 0

L N	USE CODE	CLS	LAND USE DESCRIPTION	CAP	R D	LOC ZONE	FRONT	DEPTH	TOT LND UTS	UNIT TYPE	D T	DPTH FACT	% COND	TOT ADJ	UNIT PRICE	ADJ UNIT PRICE	LAND VALUE	OTHER ADJUSTMENTS AND NOTES	YEAR	DENSITY	DECL	FRZ	YR	CONSRV

REVIEW DATE 12/02/2021 BY ME Total Acres: 4.01 Total Land Value: 314,503 Market: 0 Agricultural: 0 Common: 314,503 PRINTED 11/17/2025 BY SYS

COMM AT NW COR OF NE1/4 OF SW1/4
E 601.88 FT TO W R/W LINE US-441
R/W 200 FT FOR POB, W 418 FT, S

MAR-MIC DEVELOPERS LLC
P O BOX 3243
VALDOSTA, GA 31604

2026

05-4S-17-07608-000

COLUMBIA COUNTY PROPERTY

BUILDING CHARACTERISTICS

ELEMENT	CD	CONSTRUCTION
Exterior Wall	19	COMMON BRK 100
Roof Structur	04	WOOD TRUSS 100
Roof Cover	04	BUILT-UP 100
Interior Wall	05	DRYWALL 100
Interior Floo	14	CARPET 90
Interior Floo	08	SHT VINYL 10
Air Condition	03	CENTRAL 100
Heating Type	03	FORCED AIR 100
Bedrooms		1 100
Bathrooms		1 100
Frame	02	WOOD FRAME 100
Story Height		8 100
RMS		0 100
Stories	2.	2. 100
Units		12 100
Condition Adj	02	02 100
Kitchen Adjus	01	01 100
Quality	03	03
DOR CODE	0300	MULTI-FAM 10+
MAP NUM		MKT AREA 06
NEIGHBORHOOD/LOC	5417.00	1.00/

AREA TYPE	TOTAL GROSS AREA	PCT OF BASE	YEAR	TOT ADJ AREA	SUBAREA MARKET VALUE
BAS	728	100		728	23,329
BAS	728	100		728	23,329
BAS	1,456	100		1,456	46,658
BAS	1,456	100		1,456	46,658
FOP	252	30		76	2,436
FOP	252	30		76	2,436
FOP	252	30		76	2,436
FOP	252	30		76	2,436
FOP	252	30		76	2,436
FOP	252	30		76	2,436
TOTALS	10,248			9,192	294,558

MARKET ADJUSTMENTS

TYPE	MDL	EFF. AREA	TOT ADJ PTS	EFF. BASE RATE	REPL. COST NEW	AYB	EYB	ECON	FNCT		NORM	% COND
2500	03	9,192	89.0190	64.09	589,115	1967	1967	0	0	0	50.00	50.00

4 M/FAM ROW 0% - 0 Heated Area: 8736 HX Base Yr

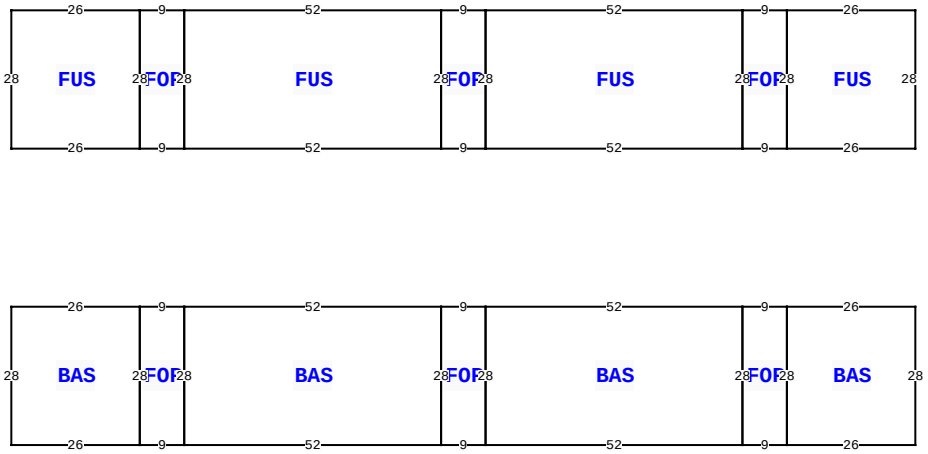

** This building has 14 Sub-Areas

1416 S MARION AVE, LAKE CITY

BLD DATE		LGL DATE	
XF DATE		LAND DATE	
INC DATE		AG DATE	

VALUATION SUMMARY

VALUATION BY	STANDARD
Tax Group: 1	Tax Dist:
BUILDING MARKET VALUE	1,421,052
TOTAL MARKET OB/XF VALUE	25,600
TOTAL LAND VALUE - MARKET	314,503
TOTAL MARKET VALUE	1,761,155
SOH/AGL Deduction	0
ASSESSED VALUE	1,761,155
TOTAL EXEMPTION VALUE	0
BASE TAXABLE VALUE	1,761,155
TOTAL JUST VALUE	1,761,155
NCON VALUE	0
INCOME VALUE	
PREVIOUS YEAR MKT VALUE	1,761,155

PERMIT NUM	DESCRIPTION	AMT	ISSUED

SALES DATA

OFF RECORD Number	DATE	TYPE INST	Q U	V I	RSN CD	SALE PRICE
1280/2417	8/27/2014	WD	U	I	38	1,053,700
GRANTOR: COLUMBIA ARMS COMMUNI						
GRANTEE: MAR-MIC DEVELOPERS						
1073/0833	1/23/2006	WD	Q	I		2,200,000
GRANTOR: THOUOUGHBRED PROPERTY						
GRANTEE: COLUMBIA ARMS COMMU						

BUILDING NOTES

BUILDING DIMENSIONS

BAS= W26 FOP= W9 BAS= W52 FOP= W9 BAS= W52 FOP= W9 BAS= W26 S28 E26 N28$ S28 E9 N28$ S28 E52 N28$ S28 E9 N28 $S28 E52 N28$ S28 E9 N28$ S28 E26 N28$ PTR=N60 FUS= W26 FOP= W9 FUS= W52 FOP= W9 FUS= W52 FOP= W9 FUS= W26 S28 E26 N28$ S28 E9 N28$ S28 E52 N28$ S28 E9 N28$ S28 E52 N28$ S28 E9 N28$ S28 E26 N28$ S60$.

EXTRA FEATURES

LN	OB/XF CODE	DESCRIPTION	BLD	CAP	L	W	UNITS	UT	Adj R	ADJ UNIT PRICE	ORIG COND	YEAR ON	YEAR ACTUAL	Q	% COND	OB/XF MKT VALUE	NOTES

LAND DESCRIPTION

TOTAL OB/XF 0

LN	USE CODE	CLS	LAND USE DESCRIPTION	CAP	RD	LOC ZONE	FRONT	DEPTH	TOT LND UTS	UNIT TYPE	DT	DPTH FACT	% COND	TOT ADJ	UNIT PRICE	ADJ UNIT PRICE	LAND VALUE	OTHER ADJUSTMENTS AND NOTES	YEAR	DENSITY	DECL	FRZ	YR	CONSRV

REVIEW DATE 12/02/2021 BY ME Total Acres: 4.01 Total Land Value: 314,503 Market: 0 Agricultural: 0 Common: 314,503 PRINTED 11/17/2025 BY SYS