LOT 37 BLOCK A WOODGATE
VILLAGE UNIT 1. ORB 527-697,
550-369, 711-253, 763-103,

KOGER ROBERT J
250 SW WOODGATE TER
LAKE CITY, FL 32055

2025

05-4S-16-02777-038

COLUMBIA COUNTY PROPERTY

BUILDING CHARACTERISTICS

ELEMENT	CD	CONSTRUCTION
Exterior Wall	05	AVERAGE 100
Roof Structur	03	GABLE/HIP 100
Roof Cover	12	MODULAR MT 100
Interior Wall	04	PLYWOOD 100
Interior Floo	14	CARPET 90
Interior Floo	08	SHT VINYL 10
Air Condition	03	CENTRAL 100
Heating Type	04	AIR DUCTED 100
Bedrooms		2 100
Bathrooms		2 100
Stories	1.	1. 100
Architectual	01	CONV 100
Units		0 100
Condition Adj	03	03 100
Kitchen Adjus	01	01 100
Quality	03	03
DOR CODE	0200	MOBILE HOME
MAP NUM		MKT AREA 06
NEIGHBORHOOD/LOC	5416.0100	1.00/

AREA TYPE	TOTAL GROSS AREA	PCT OF BASE	YEAR	TOT ADJ AREA	SUBAREA MARKET VALUE
BAS	924	100		924	22,534
FEP	60	85		51	1,244
UOP	120	25		30	732
TOTALS	1,104			1,005	24,510

MARKET ADJUSTMENTS

TYPE	MDL	EFF. AREA	TOT ADJ PTS	EFF. BASE RATE	REPL. COST NEW	AYB	EYB	ECON	FNCT		NORM	% COND
0800	02	1,005	101.6100	60.97	61,275	1982	1982	0	0	0	60.00	40.00

1 MOBILE HME – 0% - 0 Heated Area: 924 HX Base Yr

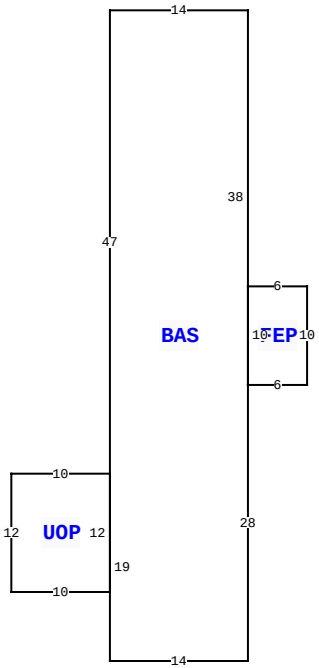

245 SW JUPITER GLN, LAKE CITY

BLD DATE		LGL DATE	
XF DATE		LAND DATE	04/21/2023 MLU
INC DATE		AG DATE	

VALUATION SUMMARY

VALUATION BY	STANDARD
Tax Group: 2	Tax Dist:
BUILDING MARKET VALUE	24,510
TOTAL MARKET OB/XF VALUE	4,000
TOTAL LAND VALUE - MARKET	18,500
TOTAL MARKET VALUE	47,010
SOH/AGL Deduction	9,079
ASSESSED VALUE	37,931
TOTAL EXEMPTION VALUE	0
BASE TAXABLE VALUE	37,931
TOTAL JUST VALUE	47,010
NCON VALUE	0
INCOME VALUE	
PREVIOUS YEAR MKT VALUE	42,159

XFOB:1:1: RIVER OAKS M H

PERMIT NUM	DESCRIPTION	AMT	ISSUED

SALES DATA

OFF RECORD Number	DATE	TYPE INST	Q / U	V / I	RSN CD	SALE PRICE
1325/2589	11/17/2016	QC	U	I	11	7,000
GRANTOR: TODD L & DEBRA E HUNT						
GRANTEE: ROBERT J KOGER						
0987/2730	7/02/2003	QC	Q	I	03	100
GRANTOR: ALPHONSE S GALANTE						
GRANTEE: TODD L & DEBRA HUNT						

BUILDING NOTES

BUILDING DIMENSIONS

BAS=[ORIG=0,0] W14 S47 S19 E14 N28 N38 $
UOP=[ORIG=-14,47] W10 S12 E10 N12 $
FEP=[ORIG=0,38] E6 N10 W6 S10 $
.

EXTRA FEATURES

LN	OB/XF CODE	DESCRIPTION	BLD	CAP	L	W	UNITS	UT	Adj R	ADJ UNIT PRICE	ORIG COND	YEAR ON	YEAR ACTUAL	Q	% COND	OB/XF MKT VALUE	NOTES
1	0130	CLFENCE 5	0	0	0	0	1.00	UT	0.00	0.00	100	2019	2019	3	100	1,000	
2	9947	Septic	0	0	0	0	1.00	UT	3,000.00	3,000.00	100			3	100	3,000	

LAND DESCRIPTION

TOTAL OB/XF 4,000

LN	USE CODE	CLS	LAND USE DESCRIPTION	CAP	RD	LOC ZONE	FRONT	DEPTH	TOT LND UTS	UNIT TYPE	DT	DPTH FACT	% COND	TOT ADJ	UNIT PRICE	ADJ UNIT PRICE	LAND VALUE	OTHER ADJUSTMENTS AND NOTES	YEAR	DENSITY	DECL	FRZ	YR	CONSRV
1	0200	C	MBL HM	0		RMH-2	75.00	145.00	1.00	LT		1.00	1.00	1.00	18,500.00	18,500.00	18,500							

REVIEW DATE 10/03/2023 BY JB Total Acres: 0.25 Total Land Value: 18,500 Market: 0 Agricultural: 0 Common: 18,500 PRINTED 07/17/2025 BY SYS