COMM NW COR OF NE1/4 OF SW1/4, R
FT TO W R/W OF U S HWY 441 FOR P
R/W 210.5 FT, W 406.60 FT, N 410

ALVAREZ SERGIO J/CAMEJO DAYCELIN
4868 N US HIGHWAY 441
LAKE CITY, FL 32055

2026

05-3S-17-04846-000

COLUMBIA COUNTY PROPERTY

BUILDING CHARACTERISTICS

ELEMENT	CD	CONSTRUCTION
Exterior Wall	01	MINIMUM 100
Roof Structur	03	GABLE/HIP 100
Roof Cover	03	COMP SHNGL 100
Interior Wall	05	DRYWALL 100
Interior Floo	09	PINE WOOD 100
Air Condition	01	NONE 100
Heating Type	01	NONE 100
Bedrooms		3 100
Bathrooms		1 100
Frame	01	NONE 100
Stories	1.	1. 100
Architectual	05	CONV 100
Units		0 100
Condition Adj	01	01 100
Kitchen Adjus	01	01 100
Quality	01	01
DOR CODE	0100	SINGLE FAMILY
MAP NUM		MKT AREA 03
NEIGHBORHOOD/LOC	5317.00	1.00/

AREA TYPE	TOTAL GROSS AREA	PCT OF BASE	YEAR	TOT ADJ AREA	SUBAREA MARKET VALUE
BAS	1,458	100		1,458	42,030
FOP	60	30		18	519
FOP	154	30		46	1,326
UCP	325	20		65	1,874
UST	312	45		140	4,036
TOTALS	2,309			1,727	49,785

MARKET ADJUSTMENTS

TYPE	MDL	EFF. AREA	TOT ADJ PTS	EFF. BASE RATE	REPL. COST NEW	AYB	EYB	ECON	FNCT		NORM	% COND
0100	01	1,727	39.6000	44.35	76,592	1955	1955	0	0	0	35.00	65.00

1 SINGLE FAM 100% - 2021 Heated Area: 1458 HX Base Yr 2021

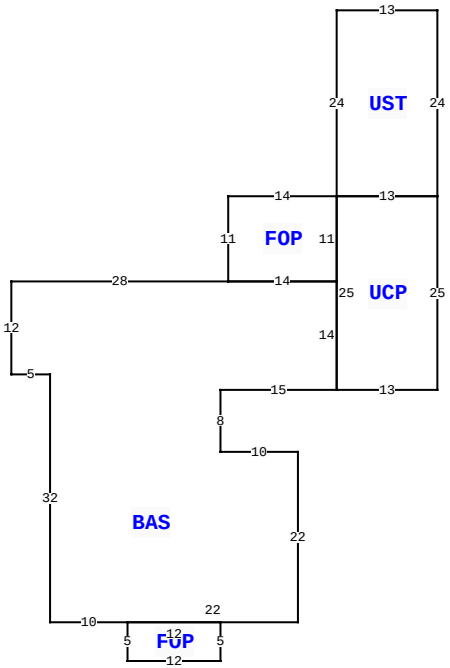

4842 N US HIGHWAY 441 , LAKE CITY

BLD DATE		LGL DATE	
XF DATE		LAND DATE	04/10/2025 MLU
INC DATE		AG DATE	

VALUATION SUMMARY

VALUATION BY		STANDARD
Tax Group: 3	Tax Dist:	
BUILDING MARKET VALUE		49,785
TOTAL MARKET OB/XF VALUE		4,000
TOTAL LAND VALUE - MARKET		40,100
TOTAL MARKET VALUE		93,885
SOH/AGL Deduction		27,830
ASSESSED VALUE		66,055
TOTAL EXEMPTION VALUE	HX HB	33,517
BASE TAXABLE VALUE		32,538
TOTAL JUST VALUE		93,885
NCON VALUE		0
INCOME VALUE		
PREVIOUS YEAR MKT VALUE		93,885

XFOB:2:1: CHADWICK MH

PERMIT NUM	DESCRIPTION	AMT	ISSUED
40577	ELECTRICAL	0	09/23/2020
30739	MAINT/ALTR	30	01/23/2013
28464	MAINT/ALTR	75	04/05/2010

SALES DATA

OFF RECORD Number	DATE	TYPE INST	Q U	V I	RSN CD	SALE PRICE
1418/0846	8/25/2020	WD	Q	I	03	40,000
GRANTOR: MARK WILLEMS						
GRANTEE: SERGIO J ALVAREZ &						
1360/0935	4/26/2018	FS	U	I	18	20,000
GRANTOR: COLUMBIA COUNTY, FLOR						
GRANTEE: MARK WILLEMS						

BUILDING NOTES

BUILDING DIMENSIONS

BAS= W28 S12 E5 S32 E10 FOP= S5 E12 N5 W12$ E22 N22 W10 N8 E15 UCP= E13 N25 W13 S25$ N14 FOP= N11 UST= E13 N24 W13 S24$ W14 S11 E14$ W14$.

EXTRA FEATURES

LN	OB/XF CODE	DESCRIPTION	BLD	CAP	L	W	UNITS	UT	Adj R	ADJ UNIT PRICE	ORIG COND	YEAR ON	YEAR ACTUAL	Q	% COND	OB/XF MKT VALUE	NOTES
1	0285	SALVAGE	0	100	66	27	1.00	UT	0.00	0.00	100	1986	1986	3	100	1,000	
2	9947	Septic	0	100	0	0	1.00	UT	3,000.00	3,000.00	100			3	100	3,000	

LAND DESCRIPTION

TOTAL OB/XF 4,000

LN	USE CODE	CLS	LAND USE DESCRIPTION	CAP	RD	LOC ZONE	FRONT	DEPTH	TOT LND UTS	UNIT TYPE	DT	DPTH FACT	% COND	TOT ADJ	UNIT PRICE	ADJ UNIT PRICE	LAND VALUE	OTHER ADJUSTMENTS AND NOTES	YEAR	DENSITY	DECL	FRZ	YR	CONSRV
1	0100	C	SFR	100		A-1	0.00	0.00	1.00	AC		1.00	1.00	1.00	10,000.00	10,000.00	10,000							
2	0000	C	VAC RES	100		A-1	0.00	0.00	2.12	AC		1.00	1.00	1.00	10,000.00	10,000.00	21,200							
3	0200	C	MBL HM	0		A-1	0.00	0.00	0.89	AC		1.00	1.00	1.00	10,000.00	10,000.00	8,900							

REVIEW DATE 11/19/2020 BY BC Total Acres: 4.01 Total Land Value: 40,100 Market: 0 Agricultural: 0 Common: 40,100 PRINTED 11/17/2025 BY SYS