COMM AT SE COR OF NE1/4 OF NE 1/
W 2518 FT FOR POB, CONT W 470 FT
SW HALTIWANGER RD, NW ALONG R/W

MARTINEZ SAMUEL/MARTINEZ JOVELIS
1845 SW HALTIWANGER RD
LAKE CITY, FL 32024

2026

04-6S-17-09597-000

COLUMBIA COUNTY PROPERTY

BUILDING CHARACTERISTICS

ELEMENT	CD	CONSTRUCTION
Exterior Wall	31	VINYL SID 100
Roof Structur	08	IRREGULAR 100
Roof Cover	14	PREFIN MT 100
Interior Wall	05	DRYWALL 100
Interior Floo	13	LAM/VNLPLK 100
Air Condition	03	CENTRAL 100
Heating Type	04	AIR DUCTED 100
Bedrooms		3 100
Bathrooms		2 100
Frame	01	NONE 100
Stories	1.	1. 100
Architectual	05	CONV 100
Units		0 100
Condition Adj	03	03 100
Kitchen Adjus	01	01 100
Quality	05	05
DOR CODE	5000	IMPROVED AG
MAP NUM		MKT AREA 02
NEIGHBORHOOD/LOC	4617.00	1.00/

AREA TYPE	TOTAL GROSS AREA	PCT OF BASE	YEAR	TOT ADJ AREA	SUBAREA MARKET VALUE
BAS	25	100		25	2,613
BAS	119	100		119	12,436
BAS	240	100		240	25,081
BAS	1,712	100		1,712	178,910
FOP	228	30		68	7,106
FSP	156	40		62	6,479
UOP	120	20		24	2,508
TOTALS	2,600			2,250	235,133

MARKET ADJUSTMENTS

TYPE	MDL	EFF. AREA	TOT ADJ PTS	EFF. BASE RATE	REPL. COST NEW	AYB	EYB	ECON	FNCT		NORM	% COND
0100	01	2,250	114.8400	128.62	289,395	1900	2010	0	0	0	18.75	81.25

1 SINGLE FAM 100% - 2024 Heated Area: 2096 HX Base Yr 2024

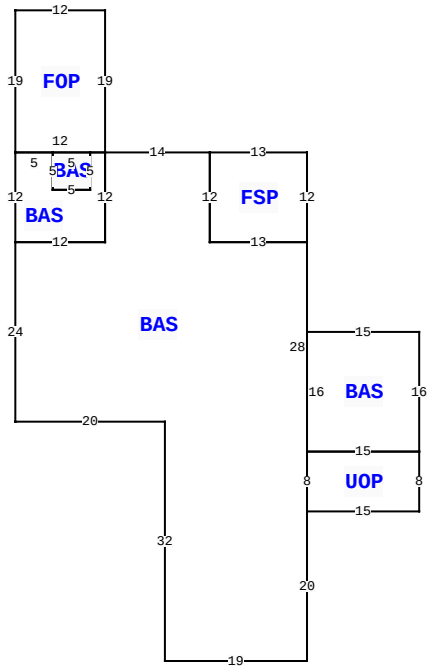

1845 SW HALTIWANGER RD, LAKE CITY

BLD DATE		LGL DATE	
XF DATE		LAND DATE	05/20/2024 MLU
INC DATE		AG DATE	

VALUATION SUMMARY

VALUATION BY		STANDARD
Tax Group: 3	Tax Dist:	
BUILDING MARKET VALUE		235,133
TOTAL MARKET OB/XF VALUE		8,200
TOTAL LAND VALUE - MARKET		50,000
TOTAL MARKET VALUE		254,453
SOH/AGL Deduction		57,280
ASSESSED VALUE		197,173
TOTAL EXEMPTION VALUE	HX HB	50,722
BASE TAXABLE VALUE		146,451
TOTAL JUST VALUE		293,333
NCON VALUE		0
INCOME VALUE		
PREVIOUS YEAR MKT VALUE		296,951

PERMIT NUM	DESCRIPTION	AMT	ISSUED
000043216	Roof Replacement	7,500	11/19/2021

SALES DATA

OFF RECORD Number	DATE	TYPE INST	Q / U	V / I	RSN CD	SALE PRICE
1499/2273	9/27/2023	WD	Q	I	01	350,000
GRANTOR: CARDOSO ANGEL VICTOR						
GRANTEE: MARTINEZ SAMUEL						
1431/351	2/10/2021	WD	U	I	12	138,600
GRANTOR: LSF9 MASTER PARTICIPA						
GRANTEE: CARDOSO ANGEL VICTO						

BUILDING NOTES

BUILDING DIMENSIONS

BAS=[ORIG=0,0] W13 N12 W14 S12 W12 S24 E20 S32 E19 N20 N8 N28 $
BAS=[ORIG=0,28] E15 N16 W15 S16 $
FOP=[ORIG=-27,-12] N19 W12 S19 E12 $
FSP=[ORIG=0,0] N12 W13 S12 E13 $
UOP=[ORIG=0,36] E15 N8 W15 S8 $
BAS=[ORIG=-27,-12] W2 S5 W5 N5 W5 S12 E12 N12 $
BAS=[ORIG=-29,-12] W5 S5 E5 N5 $
.

EXTRA FEATURES

LN	OB/XF CODE	DESCRIPTION	BLD	CAP	L	W	UNITS	UT	Adj R	ADJ UNIT PRICE	ORIG COND	YEAR ON	YEAR ACTUAL	Q	% COND	OB/XF MKT VALUE	NOTES
1	0021	BARN,FR AE	0	100	0	0	1.00	UT	0.00	0.00	100	0	0	3	100	5,000	
2	0070	CARPORT UF	0	100	0	0	1.00	UT	0.00	0.00	100	2013	2013	3	100	1,200	
3	0180	FPLC 1STRY	0	100	0	0	1.00	UT	2,000.00	2,000.00	100	2024	2023		100	2,000	

LAND DESCRIPTION

TOTAL OB/XF 8,200

LN	USE CODE	CLS	LAND USE DESCRIPTION	CAP	RD	LOC ZONE	FRONT	DEPTH	TOT LND UTS	UNIT TYPE	DT	DPTH FACT	% COND	TOT ADJ	UNIT PRICE	ADJ UNIT PRICE	LAND VALUE	OTHER ADJUSTMENTS AND NOTES	YEAR	DENSITY	DECL	FRZ	YR	CONSRV
1	0100	C	SFR	100					1.00	AC		1.00	1.00	1.00	10,000.00	10,000.00	10,000							
2	6200	A	PASTURE 3	100					4.00	AC		1.00	1.00	1.00	280.00	280.00	1,120							
3	9910	M	MKT.VAL.AG	100					4.00	AC		1.00	1.00	1.00	10,000.00	10,000.00	40,000							

REVIEW DATE 10/24/2023 BY ME Total Acres: 5.00 Total Land Value: 11,120 Market: 40,000 Agricultural: 1,120 Common: 10,000 PRINTED 11/05/2025 BY SYS