LOTS 1 & 2 CARTER CHASE S/D.
WD 1075-1813, WD 1085-851, WD 14

LEET WILLIAM THOMAS/LEET BRITTANY DEVIN
792 SE EVERGREEN DR
LAKE CITY, FL 32025

2025

04-4S-17-07596-101

COLUMBIA COUNTY PROPERTY

BUILDING CHARACTERISTICS

ELEMENT	CD	CONSTRUCTION
Exterior Wall	32	HARDIE BRD 60
Exterior Wall	21	STONE 40
Roof Structur	08	IRREGULAR 100
Roof Cover	03	COMP SHNGL 100
Interior Wall	05	DRYWALL 100
Interior Floo	12	HARDWOOD 80
Interior Floo	15	HARDTILE 20
Air Condition	03	CENTRAL 100
Heating Type	04	AIR DUCTED 100
Bedrooms		3 100
Bathrooms		2.5 100
Frame		N/A 100
Stories	2.	2. 100
Architectual	05	CONV 100
Units		0 100
Quality	08	08
DOR CODE	0100	SINGLE FAMILY
MAP NUM		MKT AREA 06
NEIGHBORHOOD/LOC	4417.00	1.00/

AREA TYPE	TOTAL GROSS AREA	PCT OF BASE	YEAR	TOT ADJ AREA	SUBAREA MARKET VALUE
BAS	570	100		570	76,027
BAS	2,220	100		2,220	296,106
FCP	450	25		112	14,938
FGR	1,650	55		908	121,110
FOP	604	30		181	24,142
FSP	300	40		120	16,006
FSP	604	40		242	32,278
FUS	1,080	100		1,080	144,051
TOTALS	7,478			5,433	724,659

MARKET ADJUSTMENTS

TYPE	MDL	EFF. AREA	TOT ADJ PTS	EFF. BASE RATE	REPL. COST NEW	AYB	EYB	ECON	FNCT		NORM	% COND
0100	01	5,433	143.4863	160.70	873,083	2007	2007	0	0	0	17.00	83.00

1 SINGLE FAM 100% - 2022 Heated Area: 3870 HX Base Yr 2022

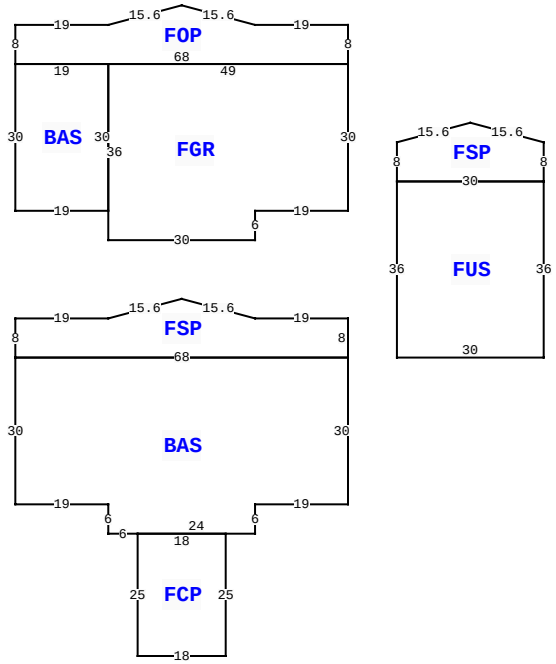

792 SE EVERGREEN DR, LAKE CITY

BLD DATE		LGL DATE	
XF DATE		LAND DATE	04/21/2023 MLU
INC DATE		AG DATE	

VALUATION SUMMARY

VALUATION BY		STANDARD
Tax Group: 1	Tax Dist:	
BUILDING MARKET VALUE		724,659
TOTAL MARKET OB/XF VALUE		52,834
TOTAL LAND VALUE - MARKET		46,250
TOTAL MARKET VALUE		823,743
SOH/AGL Deduction		287,604
ASSESSED VALUE		536,139
TOTAL EXEMPTION VALUE	HX HB	50,722
BASE TAXABLE VALUE		485,417
TOTAL JUST VALUE		823,743
NCON VALUE		0
INCOME VALUE		
PREVIOUS YEAR MKT VALUE		787,359

PERMIT NUM	DESCRIPTION	AMT	ISSUED
000044934	Solar Power Syste	36,323	07/12/2022
4025	POOL	120	05/02/2007
4025	SFR	1,332	11/14/2006

SALES DATA

OFF RECORD Number	DATE	TYPE INST	Q U	V I	RSN CD	SALE PRICE
1452/519	10/29/2021	WD	Q	V	04	37,500
GRANTOR: GREENE MARY ANN & AUD						
GRANTEE: LEET WILLIAM THOMAS						
1447/1241	9/10/2021	WD	Q	I	04	630,000
GRANTOR: ROBBINS RON						
GRANTEE: LEET WILLIAM THOMAS						

BUILDING NOTES

BUILDING DIMENSIONS

BAS= N30 FSP= N8 W19 L15 U4 D4 L15 W19 S8 E68$ W68 S30 E19 S6 E6 FCP= S25 E18 N25 W18$ E24 N6 E19$ PTR= N30 E40 FUS= N36 FSP= N8 L15 U4 D4 L15 S8 E30$ W30 S36 E30$ S30 W40$ PTR= N60 FGR= N30 FOP= N8 W19 L15 U4 D4 L15 W19 S8 E68$ W49 BAS= W19 S30 E19 N30$ S36 E30 N6 E19$ S60$.

EXTRA FEATURES

LN	OB/XF CODE	DESCRIPTION	BLD	CAP	L	W	UNITS	UT	Adj R	ADJ UNIT PRICE	ORIG COND	YEAR ON	YEAR ACTUAL	Q	% COND	OB/XF MKT VALUE	NOTES
1	0180	FPLC 1STRY	0	100	0	0	2.00	UT	2,000.00	2,000.00	100	2007	2007	3	100	4,000	
2	0280	POOL R/CON	0	100	12	28	336.00	UT	70.00	70.00	100	2007	2007	3	58	13,642	
3	0262	PRCH,FOP	0	100	7	12	84.00	UT	13.00	13.00	100	2007	2007	3	100	1,092	
4	0081	DECKING WI	0	100	0	0	1,481.00	UT	12.00	12.00	100	2007	2007	3	100	17,772	
5	0083	DOCK-LAKE	0	100	0	0	502.00	UT	11.50	11.50	100	2007	2007	3	40	2,309	
6	0166	CONC,PAVMT	0	100	0	0	4,673.00	UT	3.00	3.00	100	2007	2007	3	100	14,019	

LAND DESCRIPTION

TOTAL OB/XF 52,834

LN	USE CODE	CLS	LAND USE DESCRIPTION	CAP	RD	LOC ZONE	FRONT	DEPTH	TOT LND UTS	UNIT TYPE	DT	DPTH FACT	% COND	TOT ADJ	UNIT PRICE	ADJ UNIT PRICE	LAND VALUE	OTHER ADJUSTMENTS AND NOTES	YEAR	DENSITY	DECL	FRZ	YR	CONSRV
1	0133	C	SFR LAKE	100		RSF-1	0.00	0.00	1.00	LT		1.00	1.00	1.25	18,500.00	23,125.00	23,125							
2	0020	C	VAC/WATER	0		RSF-1	0.00	0.00	1.00	LT		1.00	1.00	1.25	18,500.00	23,125.00	23,125							

REVIEW DATE 12/01/2021 BY CP Total Acres: 3.78 Total Land Value: 46,250 Market: 0 Agricultural: 0 Common: 46,250 PRINTED 08/19/2025 BY SYS