COMM SW COR OF SEC, RUN E 100 FT
US-441, RUN N ALONG R/W 570.05 F
FT FOR POB, CONT E 397.79 FT, S

RUBIO SANTOS B/RUBIO TANIA B
432 SE SUNSET GLN
HIGH SPRINGS, FL 32643

2026

03-7S-17-09879-014

COLUMBIA COUNTY PROPERTY

BUILDING CHARACTERISTICS

ELEMENT	CD	CONSTRUCTION
Exterior Wall	05	AVERAGE 100
Roof Structur	03	GABLE/HIP 100
Roof Cover	14	PREFIN MT 100
Interior Wall	02	WALL BD/WD 100
Interior Floo	06	VINYL ASB 100
Air Condition	01	NONE 100
Heating Type	02	CONVECTION 100
Bedrooms		2 100
Bathrooms		2 100
Frame	01	NONE 100
Stories	1.	1. 100
Architectual	05	CONV 100
Units		0 100
Condition Adj	01	01 100
Kitchen Adjus	01	01 100
Quality	01	01
DOR CODE	0101	SFRES/SFRES
MAP NUM		MKT AREA 02
NEIGHBORHOOD/LOC	3717.00	1.00/

AREA TYPE	TOTAL GROSS AREA	PCT OF BASE	YEAR	TOT ADJ AREA	SUBAREA MARKET VALUE
BAS	960	100		960	39,350
UEP	240	60		144	5,903
UOP	96	20		19	779
UOP	120	20		24	983
TOTALS	1,416			1,147	47,014

MARKET ADJUSTMENTS

TYPE	MDL	EFF. AREA	TOT ADJ PTS	EFF. BASE RATE	REPL. COST NEW	AYB	EYB	ECON	FNCT		NORM	% COND
0100	01	1,147	56.3040	63.06	72,330	1991	1991	0	0	0	35.00	65.00

1 SINGLE FAM 0% - 2019 Heated Area: 960 HX Base Yr 2019

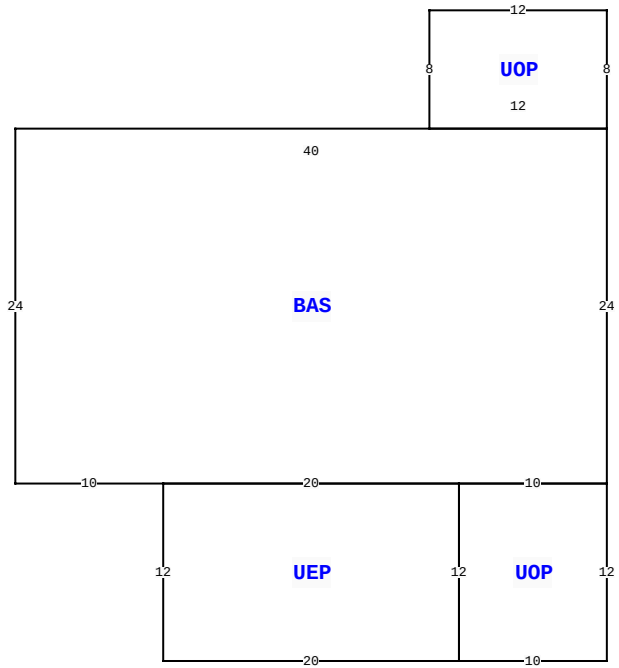

432 SE SUNSET GLN, HIGH SPRINGS

BLD DATE		LGL DATE	
XF DATE		LAND DATE	05/15/2024 MLU
INC DATE		AG DATE	

VALUATION SUMMARY

VALUATION BY		STANDARD
Tax Group: 3	Tax Dist:	
BUILDING MARKET VALUE		136,781
TOTAL MARKET OB/XF VALUE		4,092
TOTAL LAND VALUE - MARKET		50,100
TOTAL MARKET VALUE		190,973
SOH/AGL Deduction		45,630
ASSESSED VALUE		145,343
TOTAL EXEMPTION VALUE	HX HB	50,722
BASE TAXABLE VALUE		94,621
TOTAL JUST VALUE		190,973
NCON VALUE		0
INCOME VALUE		
PREVIOUS YEAR MKT VALUE		190,973

PERMIT NUM	DESCRIPTION	AMT	ISSUED
000044136	Electrical Servic	0	04/08/2022

SALES DATA

OFF RECORD Number	DATE	TYPE INST	Q / U	V / I	RSN CD	SALE PRICE
1365/2044	7/27/2018	WD	Q	I	01	68,000
GRANTOR: KEVIN LAWRENCE						
GRANTEE: SANTOS B & TANIA B						
1260/2126	8/30/2013	LE	U	I	11	100
GRANTOR: ROSE A CRONK						
GRANTEE: ROSE CRONK (LIFE ES						

BUILDING NOTES

BUILDING DIMENSIONS

UOP= N8 W12 S8 E12$ BAS= W40 S24 E10 UEP= S12 E20 N12W20$ E20 UOP= S12 E10 N12 W10$ E10 N24$.

EXTRA FEATURES

LN	OB/XF CODE	DESCRIPTION	BLD	CAP	L	W	UNITS	UT	Adj R	ADJ UNIT PRICE	ORIG COND	YEAR ON	YEAR ACTUAL	Q	% COND	OB/XF MKT VALUE	NOTES
1	0040	BARN,POLE	0	100	48	36	1,728.00	UT	3.00	3.00	50	2005	2005	3	50	2,592	
2	0294	SHED WOOD/	0	100	0	0	1.00	UT	2,500.00	2,500.00	50	2013	2013	3	50	1,250	
3	0294	SHED WOOD/	0	100	0	0	1.00	UT	0.00	0.00	100	2013	2013	3	100	200	
4	0252	LEAN-TO W/	0	100	0	0	1.00	UT	0.00	0.00	100	2013	2013	3	100	50	

LAND DESCRIPTION

TOTAL OB/XF 4,092

LN	USE CODE	CLS	LAND USE DESCRIPTION	CAP	RD	LOC ZONE	FRONT	DEPTH	TOT LND UTS	UNIT TYPE	DT	DPTH FACT	% COND	TOT ADJ	UNIT PRICE	ADJ UNIT PRICE	LAND VALUE	OTHER ADJUSTMENTS AND NOTES	YEAR	DENSITY	DECL	FRZ	YR	CONSRV
1	0100	C	SFR	100		A-1	397.00	548.00	4.01	AC		1.00	1.00	1.00	10,000.00	10,000.00	40,100							
2	0100	C	SFR	0			0.00	0.00	1.00	AC		1.00	1.00	1.00	10,000.00	10,000.00	10,000							

REVIEW DATE 04/11/2022 BY JB Total Acres: 5.01 Total Land Value: 50,100 Market: 0 Agricultural: 0 Common: 50,100 PRINTED 11/18/2025 BY SYS

COMM SW COR OF SEC, RUN E 100 FT
US-441, RUN N ALONG R/W 570.05 F
FT FOR POB, CONT E 397.79 FT, S

RUBIO SANTOS B/RUBIO TANIA B
432 SE SUNSET GLN
HIGH SPRINGS, FL 32643

2026

03-7S-17-09879-014

COLUMBIA COUNTY PROPERTY

BUILDING CHARACTERISTICS

ELEMENT	CD	CONSTRUCTION
Exterior Wall	31	VINYL SID 100
Roof Structur	03	GABLE/HIP 100
Roof Cover	01	MINIMUM 100
Interior Wall	01	MINIMUM 100
Interior Floo	14	CARPET 90
Interior Floo	08	SHT VINYL 10
Air Condition	03	CENTRAL 100
Heating Type	04	AIR DUCTED 100
Bedrooms		3 100
Bathrooms		2 100
Frame	01	NONE 100
Stories	1.5	1.5 100
Architectual	05	CONV 100
Units		0 100
Condition Adj	01	01 100
Kitchen Adjus	01	01 100
Quality	02	02
DOR CODE	0101	SFRES/SFRES
MAP NUM		MKT AREA 02
NEIGHBORHOOD/LOC	3717.00	1.00/

AREA TYPE	TOTAL GROSS AREA	PCT OF BASE	YEAR	TOT ADJ AREA	SUBAREA MARKET VALUE
BAS	1,180	100		1,180	53,851
FOP	160	30		48	2,191
SFB	560	80		448	20,445
UCP	420	20		84	3,834
UDU	288	55		158	7,210
UOP	84	20		17	776
UOP	160	20		32	1,461
TOTALS	2,852			1,967	89,767

MARKET ADJUSTMENTS

TYPE	MDL	EFF. AREA	TOT ADJ PTS	EFF. BASE RATE	REPL. COST NEW	AYB	EYB	ECON	FNCT		NORM	% COND
0100	01	1,967	62.6892	70.21	138,103	1990	1990	0	0	0	35.00	65.00

2 SINGLE FAM 100% - 2019 Heated Area: 1740 HX Base Yr 2019

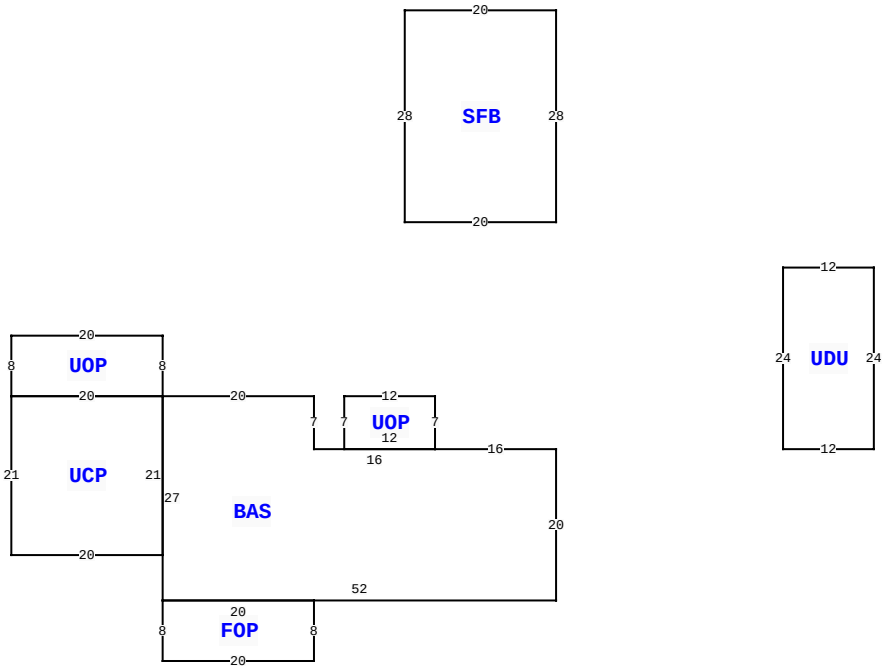

432 SE SUNSET GLN, HIGH SPRINGS

BLD DATE		LGL DATE	
XF DATE		LAND DATE	05/15/2024 MLU
INC DATE		AG DATE	

VALUATION SUMMARY

VALUATION BY		STANDARD
Tax Group: 3	Tax Dist:	
BUILDING MARKET VALUE		136,781
TOTAL MARKET OB/XF VALUE		4,092
TOTAL LAND VALUE - MARKET		50,100
TOTAL MARKET VALUE		190,973
SOH/AGL Deduction		45,630
ASSESSED VALUE		145,343
TOTAL EXEMPTION VALUE	HX HB	50,722
BASE TAXABLE VALUE		94,621
TOTAL JUST VALUE		190,973
NCON VALUE		0
INCOME VALUE		
PREVIOUS YEAR MKT VALUE		190,973

PERMIT NUM	DESCRIPTION	AMT	ISSUED

SALES DATA

OFF RECORD Number	DATE	TYPE INST	Q / U	V / I	RSN CD	SALE PRICE
1365/2044	7/27/2018	WD	Q	I	01	68,000
GRANTOR: KEVIN LAWRENCE						
GRANTEE: SANTOS B & TANIA B						
1260/2126	8/30/2013	LE	U	I	11	100
GRANTOR: ROSE A CRONK						
GRANTEE: ROSE CRONK (LIFE ES						

BUILDING NOTES

BUILDING DIMENSIONS

BAS= W16 UOP= N7 W12 S7 E12$ W16 N7 W20 UOP= N8 W20 S8 E20$ UCP= W20 S21 E20 N21$ S27 FOP= S8 E20 N8 W20 $ E52 N20$ PTR= N30 SFB= N28 W20 S28 E20$ S30 PTR= E30 UDU= E12 N24 W12 S24$ W30$.

EXTRA FEATURES

L N	OB/XF CODE	DESCRIPTION	BLD	CAP	L	W	UNITS	UT	Adj R	ADJ UNIT PRICE	ORIG COND	YEAR ON	YEAR ACTUAL	Q	% COND	OB/XF MKT VALUE	NOTES

LAND DESCRIPTION

TOTAL OB/XF 0

L N	USE CODE	CLS	LAND USE DESCRIPTION	CAP	R D	LOC ZONE	FRONT	DEPTH	TOT LND UTS	UNIT TYPE	D T	DPTH FACT	% COND	TOT ADJ	UNIT PRICE	ADJ UNIT PRICE	LAND VALUE	OTHER ADJUSTMENTS AND NOTES	YEAR	DENSITY	DECL	FRZ	YR	CONSRV

REVIEW DATE 04/11/2022 BY JB Total Acres: 5.01 Total Land Value: 50,100 Market: 0 Agricultural: 0 Common: 50,100 PRINTED 11/18/2025 BY SYS