LOT 9 FORT WHITE PARK.

753-864, WD 1003-1839, WD 1022-1

GRADY-THOMAS HARRIETT
199 SW BLUE JAY CT
FORT WHITE, FL 32038

2026

03-7S-16-04060-109

COLUMBIA COUNTY PROPERTY

BUILDING CHARACTERISTICS

ELEMENT	CD	CONSTRUCTION
Exterior Wall	32	HARDIE BRD 100
Roof Structur	03	GABLE/HIP 100
Roof Cover	03	COMP SHNGL 100
Interior Wall	05	DRYWALL 100
Interior Floo	14	CARPET 90
Interior Floo	15	HARDTILE 10
Air Condition	03	CENTRAL 100
Heating Type	04	AIR DUCTED 100
Bedrooms		3 100
Bathrooms		2 100
Frame	02	WOOD FRAME 100
Stories	1.	1. 100
Architectual	05	CONV 100
Units		0 100
Condition Adj	03	03 100
Kitchen Adjus	01	01 100
Quality	05	05

DOR CODE	0100	SINGLE FAMILY	
MAP NUM		MKT AREA	02
NEIGHBORHOOD/LOC	34616.070	1.00/	

AREA TYPE	TOTAL GROSS AREA	PCT OF BASE	YEAR	TOT ADJ AREA	SUBAREA MARKET VALUE
BAS	712	100		712	65,861
BAS	1,610	100		1,610	148,927
FGR	462	55		254	23,495
FOP	244	30		73	6,753
FSP	168	40		67	6,198
FSP	213	40		85	7,863
TOTALS	3,409			2,801	259,096

MARKET ADJUSTMENTS

TYPE	MDL	EFF. AREA	TOT ADJ PTS	EFF. BASE RATE	REPL. COST NEW	AYB	EYB	ECON	FNCT		NORM	% COND
0100	01	2,801	104.5440	117.09	327,969	2004	2004	0	0	0	21.00	79.00

1 SINGLE FAM 100% - 2023 Heated Area: 2322 HX Base Yr 2023

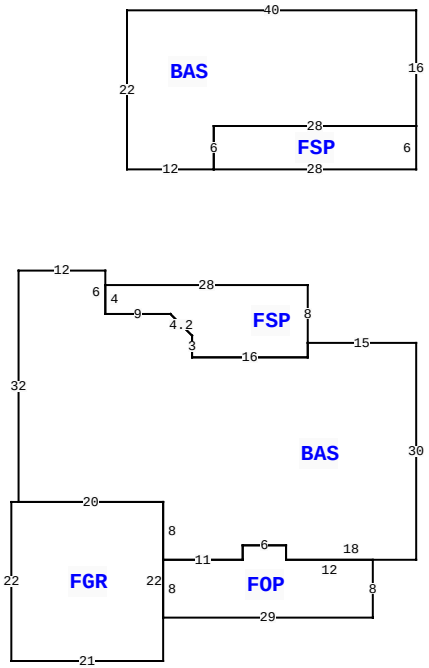

199 SW BLUE JAY CT, FORT WHITE

BLD DATE		LGL DATE	
XF DATE		LAND DATE	03/11/2022 MLU
INC DATE		AG DATE	

VALUATION SUMMARY

VALUATION BY		STANDARD
Tax Group: 4	Tax Dist:	
BUILDING MARKET VALUE		259,096
TOTAL MARKET OB/XF VALUE		18,073
TOTAL LAND VALUE - MARKET		15,000
TOTAL MARKET VALUE		292,169
SOH/AGL Deduction		1,803
ASSESSED VALUE		290,366
TOTAL EXEMPTION VALUE	HX HB	50,722
BASE TAXABLE VALUE		239,644
TOTAL JUST VALUE		292,169
NCON VALUE		0
INCOME VALUE		
PREVIOUS YEAR MKT VALUE		296,321

PERMIT NUM	DESCRIPTION	AMT	ISSUED
000053707	Roof Replacement	21,525	07/30/2025
000053709	Roof Replacement	2,625	07/30/2025
22952	POOL ENCL	25	03/25/2005
22736	POOL	90	01/27/2005
21442	SFR	424	01/23/2004

SALES DATA

OFF RECORD Number	DATE	TYPE INST	Q U	V I	RSN CD	SALE PRICE
1458/1730	12/28/2021	WD	Q	I	01	229,000
GRANTOR: HILDEBRAND MARGARET A						
GRANTEE: GRADY-THOMAS HARRIE						
1135/2009	11/07/2007	WD	Q	I		255,900
GRANTOR: WYSEL						
GRANTEE: MARGARET HILDEBRAND						

BUILDING NOTES

BUILDING DIMENSIONS

BAS= W15 FSP= N8 W28 S4 E9 D3 R3 S3 E16 N2$ S2 W16 N3 L3 U3 W9 N6 W12 S32 FGR= W1 S22 E21 N22 W20$ E20 S8 FOP= S8 E29 N8 W12 N2 W6 S2 W11$ E11 N2 E6 S2 E18 N30$ PTR= N30 BAS= N16 W40 S22 E12 FSP= E28 N6 W28 S6$ N6 E28$ S30$.

EXTRA FEATURES

LN	OB/XF CODE	DESCRIPTION	BLD	CAP	L	W	UNITS	UT	Adj R	ADJ UNIT PRICE	ORIG COND	YEAR ON	YEAR ACTUAL	Q	% COND	OB/XF MKT VALUE	NOTES
1	0166	CONC,PAVMT	0	100	0	0	1,384.00	UT	2.00	2.00	100	2004	2004	3	100	2,768	
2	0280	POOL R/CON	0	100	12	26	312.00	UT	70.00	70.00	100	2005	2005	3	47	10,265	
3	0282	POOL ENCL	0	100	21	40	840.00	UT	15.00	15.00	100	2005	2005	3	40	5,040	

LAND DESCRIPTION

TOTAL OB/XF 18,073

LN	USE CODE	CLS	LAND USE DESCRIPTION	CAP	RD	LOC ZONE	FRONT	DEPTH	TOT LND UTS	UNIT TYPE	DT	DPTH FACT	% COND	TOT ADJ	UNIT PRICE	ADJ UNIT PRICE	LAND VALUE	OTHER ADJUSTMENTS AND NOTES	YEAR	DENSITY	DECL	FRZ	YR	CONSRV
1	0100	C	SFR	100		A-1	0.00	0.00	1.00	LT		1.00	1.00	1.00	15,000.00	15,000.00	15,000							

REVIEW DATE 08/25/2025 BY chuck Total Acres: 0.50 Total Land Value: 15,000 Market: 0 Agricultural: 0 Common: 15,000 PRINTED 10/09/2025 BY SYS