LOT 7 SEDGEFIELD S/D PHASE 1.
956-61, WD 1056-771, WD 1071-212

MARCH ROBERT/MARCH BARBARA
323 SW LOGSTON CT
FT WHITE, FL 32038

2025

03-6S-16-03767-107

COLUMBIA COUNTY PROPERTY

BUILDING CHARACTERISTICS

ELEMENT	CD	CONSTRUCTION
Exterior Wall	32	HARDIE BRD 100
Roof Structur	08	IRREGULAR 100
Roof Cover	03	COMP SHNGL 100
Interior Wall	05	DRYWALL 100
Interior Floo	12	HARDWOOD 100
Air Condition	03	CENTRAL 100
Heating Type	04	AIR DUCTED 100
Bedrooms		3 100
Bathrooms		2.5 100
Frame	02	WOOD FRAME 100
Stories	1.	1. 100
Architectual	05	CONV 100
Units		0 100
Quality	05	05

DOR CODE 0100 SINGLE FAMILY
MAP NUM | MKT AREA 02
NEIGHBORHOOD/LOC 3616.00 1.00/

AREA TYPE	TOTAL GROSS AREA	PCT OF BASE	YEAR	TOT ADJ AREA	SUBAREA MARKET VALUE
BAS	2,069	100		2,069	249,759
FDG	480	60		288	34,766
FGR	483	55		266	32,110
FOP	108	30		32	3,862
FOP	115	30		34	4,104
TOTALS	3,255			2,689	324,602

MARKET ADJUSTMENTS

TYPE	MDL	EFF. AREA	TOT ADJ PTS	EFF. BASE RATE	REPL. COST NEW	AYB	EYB	ECON	FNCT		NORM	% COND
0100	01	2,689	114.6600	128.42	345,321	2018	2018	0	0	0	6.00	94.00

1 SINGLE FAM – 100% - 2019 Heated Area: 2069 HX Base Yr 2019

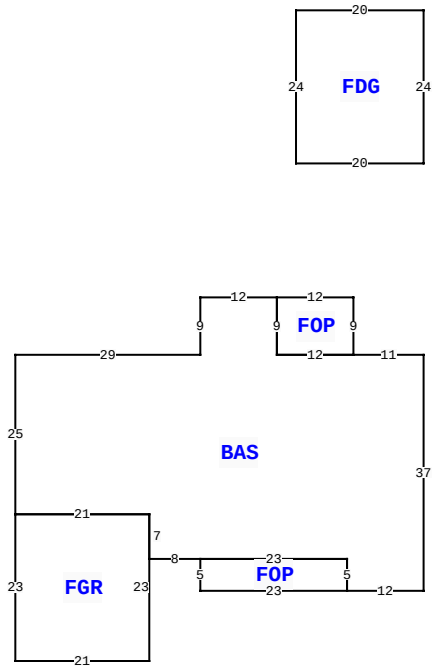

323 SW LOGSTON CT, FORT WHITE

BLD DATE		LGL DATE	
XF DATE		LAND DATE	04/07/2025 MLU
INC DATE		AG DATE	

VALUATION SUMMARY

VALUATION BY		STANDARD
Tax Group: 3	Tax Dist:	
BUILDING MARKET VALUE		324,602
TOTAL MARKET OB/XF VALUE		810
TOTAL LAND VALUE - MARKET		55,000
TOTAL MARKET VALUE		380,412
SOH/AGL Deduction		122,471
ASSESSED VALUE		257,941
TOTAL EXEMPTION VALUE	HX HB SX	100,722
BASE TAXABLE VALUE		157,219
TOTAL JUST VALUE		380,412
NCON VALUE		0
INCOME VALUE		
PREVIOUS YEAR MKT VALUE		358,353

PERMIT NUM	DESCRIPTION	AMT	ISSUED
35870	STORAGE	148	10/11/2017
35796	SFR	926	09/19/2017

SALES DATA

OFF RECORD Number	DATE	TYPE INST	Q U /	V I /	RSN CD	SALE PRICE
1363/1475	6/29/2018	WD	U	V	11	100
GRANTOR: PAULINE & KENNETH ROR						
GRANTEE: ROBERT & BARBARA MA						
1363/0951	6/02/2018	WD	U	V	11	100
GRANTOR: PAULINE & KENNETH ROR						
GRANTEE: ROBERT & BARBARA MA						

BUILDING NOTES

BUILDING DIMENSIONS

BAS= W11 FOP= N9 W12 S9 E12$ W12 N9 W12 S9 W29 S25 FGR= S23 E21 N23 W21$ E21 S7 E8 FOP= S5 E23 N5 W23$ E23 S5 E12 N37$ PTR= N30 FDG= N24 W20 S24 E20$ S30$.

EXTRA FEATURES

LN	OB/XF CODE	DESCRIPTION	BLD	CAP	L	W	UNITS	UT	Adj R	ADJ UNIT PRICE	ORIG COND	YEAR ON	YEAR ACTUAL	Q	% COND	OB/XF MKT VALUE	NOTES
1	0296	SHED METAL	0	100	10	12	120.00	UT	5.00	5.00	100	2018	2018	3	100	600	
2	0166	CONC,PAVMT	0	100	5	21	105.00	UT	2.00	2.00	100	2018	2018	3	100	210	

LAND DESCRIPTION

TOTAL OB/XF 810

LN	USE CODE	CLS	LAND USE DESCRIPTION	CAP	RD	LOC ZONE	FRONT	DEPTH	TOT LND UTS	UNIT TYPE	DT	DPTH FACT	% COND	TOT ADJ	UNIT PRICE	ADJ UNIT PRICE	LAND VALUE	OTHER ADJUSTMENTS AND NOTES	YEAR	DENSITY	DECL	FRZ	YR	CONSRV
1	0100	C	SFR	100		A-1	0.00	0.00	1.00	LT		1.00	1.00	1.00	55,000.00	55,000.00	55,000							

REVIEW DATE 01/31/2019 BY HC Total Acres: 5.01 Total Land Value: 55,000 Market: 0 Agricultural: 0 Common: 55,000 PRINTED 07/25/2025 BY SYS