LOT 10 BLK E EASTSIDE VILLAGE UN
LE 955-1126, QC 1009-907, WD 102

FALLING CREEK INVESTMENTS LLC
P O BOX 327
LAKE BUTLER, FL 32054

2025

03-4S-17-07592-640

COLUMBIA COUNTY PROPERTY

BUILDING CHARACTERISTICS

ELEMENT	CD	CONSTRUCTION
Exterior Wall	31	VINYL SID 90
Exterior Wall	19	COMMON BRK 10
Roof Structur	03	GABLE/HIP 100
Roof Cover	03	COMP SHNGL 100
Interior Wall	05	DRYWALL 100
Interior Floo	14	CARPET 90
Interior Floo	08	SHT VINYL 10
Air Condition	03	CENTRAL 100
Heating Type	04	AIR DUCTED 100
Bedrooms		3 100
Bathrooms		2 100
Frame	02	WOOD FRAME 100
Stories	1.	1. 100
Architectual	05	CONV 100
Units		0 100
Condition Adj	03	03 100
Kitchen Adjus	01	01 100
Quality	05	05
DOR CODE	0100	SINGLE FAMILY
MAP NUM		MKT AREA 06
NEIGHBORHOOD/LOC	3417.1100	1.10/

AREA TYPE	TOTAL GROSS AREA	PCT OF BASE	YEAR	TOT ADJ AREA	SUBAREA MARKET VALUE
BAS	96	100		96	9,296
BAS	128	100		128	12,395
BAS	160	100		160	15,494
BAS	1,239	100		1,239	119,979
FEP	130	80		104	10,071
FGR	286	55		157	15,203
FOP	60	30		18	1,743
FST	120	55		66	6,391
TOTALS	2,219			1,968	190,571

MARKET ADJUSTMENTS

TYPE	MDL	EFF. AREA	TOT ADJ PTS	EFF. BASE RATE	REPL. COST NEW	AYB	EYB	ECON	FNCT		NORM	% COND
0100	01	1,968	107.6000	132.56	260,878	2002	2002	0	0	0	26.95	73.05

1 SINGLE FAM 0% - 2021 Heated Area: 1623 HX Base Yr

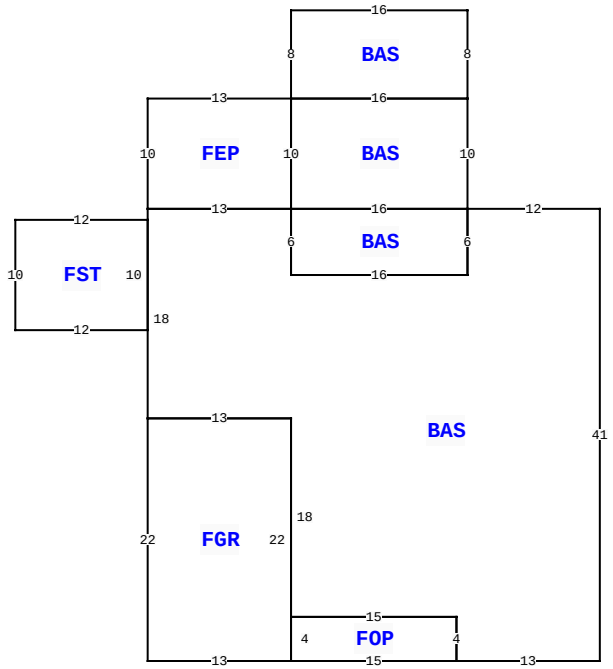

138 SE ELM LOOP, LAKE CITY

BLD DATE		LGL DATE	
XF DATE		LAND DATE	04/21/2023 MLU
INC DATE		AG DATE	

VALUATION SUMMARY

VALUATION BY	STANDARD
Tax Group: 2	Tax Dist:
BUILDING MARKET VALUE	190,571
TOTAL MARKET OB/XF VALUE	1,214
TOTAL LAND VALUE - MARKET	24,750
TOTAL MARKET VALUE	216,535
SOH/AGL Deduction	23,626
ASSESSED VALUE	192,909
TOTAL EXEMPTION VALUE	0
BASE TAXABLE VALUE	192,909
TOTAL JUST VALUE	216,535
NCON VALUE	0
INCOME VALUE	
PREVIOUS YEAR MKT VALUE	207,616

PERMIT NUM	DESCRIPTION	AMT	ISSUED
25355	ADDN SFR	200	01/02/2007
19082	SFR	222	12/28/2001

SALES DATA

OFF RECORD Number	DATE	TYPE INST	Q U /	V I /	RSN CD	SALE PRICE
1407/2528	3/12/2020	WD	U	I	37	90,000
GRANTOR: ANNETTE B PEARSON						
GRANTEE: FALLING CREEK INVES						
1130/2306	8/17/2007	QC	Q	I	01	100
GRANTOR: WAYNE P & JEAN D COST						
GRANTEE: ANNETTE B PEARSON						

BUILDING NOTES

BUILDING DIMENSIONS

BAS= W12 BAS= N10 BAS= N8 W16 S8 E16$ W16 FEP= W13 S10 E13 N10$ S10 E16$ BAS= W16 S6 E16 N6$ S6 W16 N6 W13 S1 FST= W12 S10 E12 N10$ S18 FGR= S22 E13 N22 W13$ E13 S18 FOP= S4 E15 N4 W15$ E15 S4 E13 N41$.

EXTRA FEATURES

LN	OB/XF CODE	DESCRIPTION	BLD	CAP	L	W	UNITS	UT	Adj R	ADJ UNIT PRICE	ORIG COND	YEAR ON	YEAR ACTUAL	Q	% COND	OB/XF MKT VALUE	NOTES
1	0166	CONC,PAVMT	0	0	0	0	407.00	UT	2.00	2.00	100	2002	2002	3	100	814	
2	0166	CONC,PAVMT	0	0	0	0	1.00	UT	0.00	0.00	100	2012	2012	3	100	400	

LAND DESCRIPTION

TOTAL OB/XF 1,214

LN	USE CODE	CLS	LAND USE DESCRIPTION	CAP	RD	LOC ZONE	FRONT	DEPTH	TOT LND UTS	UNIT TYPE	DT	DPTH FACT	% COND	TOT ADJ	UNIT PRICE	ADJ UNIT PRICE	LAND VALUE	OTHER ADJUSTMENTS AND NOTES	YEAR	DENSITY	DECL	FRZ	YR	CONSRV
1	0100	C	SFR	0		RSF-1	0.00	0.00	1.00	LT		1.00	1.00	1.10	22,500.00	24,750.00	24,750							

REVIEW DATE 02/28/2017 BY DF Total Acres: 0.19 Total Land Value: 24,750 Market: 0 Agricultural: 0 Common: 24,750 PRINTED 08/25/2025 BY SYS