COMM NW COR SEC, E 1320.05 FT TO
OAK HILL ESTAT REPLAT, S ALONG E
727.50 FT TO SE COR THEREOF, CON

HILL FREDERICK J SR
P O BOX 73
SUWANNEE, FL 32692

2026

03-4S-17-07490-000

COLUMBIA COUNTY PROPERTY

BUILDING CHARACTERISTICS

ELEMENT	CD	CONSTRUCTION
Exterior Wall	05	AVERAGE 100
Roof Structur	03	GABLE/HIP 100
Roof Cover	03	COMP SHNGL 100
Interior Wall	05	DRYWALL 100
Interior Floo	14	CARPET 60
Interior Floo	06	VINYL ASB 40
Air Condition	03	CENTRAL 100
Heating Type	04	AIR DUCTED 100
Bedrooms		3 100
Bathrooms		1.5 100
Frame	01	NONE 100
Stories	1.5	1.5 100
Architectual	05	CONV 100
Units		0 100
Condition Adj	03	03 100
Kitchen Adjus	01	01 100
Quality	05	05
DOR CODE	0100	SINGLE FAMILY
MAP NUM		MKT AREA 06
NEIGHBORHOOD/LOC	3417.00	1.00/

AREA TYPE	TOTAL GROSS AREA	PCT OF BASE	YEAR	TOT ADJ AREA	SUBAREA MARKET VALUE
BAS	922	100		922	69,046
FOP	132	30		40	2,995
FUS	912	100		912	68,297
UDG	396	55		218	16,325
UOP	238	20		48	3,595
UST	80	45		36	2,696
UST	132	45		59	4,418
TOTALS	2,812			2,235	167,371

MARKET ADJUSTMENTS

TYPE	MDL	EFF. AREA	TOT ADJ PTS	EFF. BASE RATE	REPL. COST NEW	AYB	EYB	ECON	FNCT		NORM	% COND
0100	01	2,235	102.8685	115.21	257,494	1966	1966	0	0	0	35.00	65.00

1 SINGLE FAM 0% - 2024 Heated Area: 1834 HX Base Yr

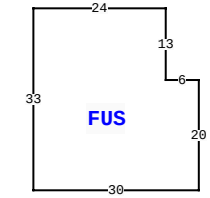

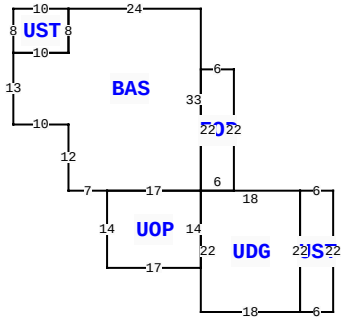

152 SE CARDINAL GLN, LAKE CITY

BLD DATE		LGL DATE	
XF DATE		LAND DATE	04/10/2025 MLU
INC DATE		AG DATE	

VALUATION SUMMARY

VALUATION BY	STANDARD
Tax Group: 2	Tax Dist:
BUILDING MARKET VALUE	167,371
TOTAL MARKET OB/XF VALUE	3,720
TOTAL LAND VALUE - MARKET	45,540
TOTAL MARKET VALUE	216,631
SOH/AGL Deduction	0
ASSESSED VALUE	216,631
TOTAL EXEMPTION VALUE	0
BASE TAXABLE VALUE	216,631
TOTAL JUST VALUE	216,631
NCON VALUE	0
INCOME VALUE	
PREVIOUS YEAR MKT VALUE	216,631

PERMIT NUM	DESCRIPTION	AMT	ISSUED

SALES DATA

OFF RECORD Number	DATE	TYPE INST	Q U /	V I /	RSN CD	SALE PRICE
1473/672	8/12/2022	LE	U	I	14	100
GRANTOR: HILL FREDERICK J SR (						
GRANTEE: WALTRIP LISA HILL (						
1472/2263	6/28/2022	LE	U	I	14	100
GRANTOR: HILL FREDERICK J SR (						
GRANTEE: WALTRIP LISA HILL (						

BUILDING NOTES

BUILDING DIMENSIONS

BAS= W24 UST= W10 S8 E10 N8$S8 W10 S13 E10 S12 E7 UOP= S14 E17N14 W17$ E17 UDG= S22 E18 UST= E6 N22 W6 S22$ N22 W18 $ FOP= E6 N22 W6 S22$ N33$ PTR=N30 FUS= N20 W6 N13 W24 S33 E30 $ S30$.

EXTRA FEATURES

LN	OB/XF CODE	DESCRIPTION	BLD	CAP	L	W	UNITS	UT	Adj R	ADJ UNIT PRICE	ORIG COND	YEAR ON	YEAR ACTUAL	Q	% COND	OB/XF MKT VALUE	NOTES
1	0190	FPLC PF	0	0	0	0	1.00	UT	1,200.00	1,200.00	100	0	0	3	100	1,200	
2	0262	PRCH,FOP	0	0	30	30	900.00	UT	2.80	2.80	100	0	0	3	100	2,520	

LAND DESCRIPTION

TOTAL OB/XF 3,720

LN	USE CODE	CLS	LAND USE DESCRIPTION	CAP	RD	LOC ZONE	FRONT	DEPTH	TOT LND UTS	UNIT TYPE	DT	DPTH FACT	% COND	TOT ADJ	UNIT PRICE	ADJ UNIT PRICE	LAND VALUE	OTHER ADJUSTMENTS AND NOTES	YEAR	DENSITY	DECL	FRZ	YR	CONSRV
1	0100	C	SFR	0		A-1	0.00	0.00	5.06	AC		1.00	1.00	1.00	9,000.00	9,000.00	45,540							

REVIEW DATE 03/07/2017 BY DF Total Acres: 5.06 Total Land Value: 45,540 Market: 0 Agricultural: 0 Common: 45,540 PRINTED 11/19/2025 BY SYS