COMM NW COR OF SEC, RUN S 1020 F
TO E R/W LINE OF RD FOR POB, CON
S 375 FT, W 580.8 FT, N 375 FT T

CHURCH OF JESUS CHRIST OF LATTER DAY SAINTS
50 E NORTH TEMPLE ST, TAX ADMIN RE FILE #540-1488
SALT LAKE CITY, UT 84150-0022

2026

03-4S-17-07488-000

COLUMBIA COUNTY PROPERTY

BUILDING CHARACTERISTICS

ELEMENT	CD	CONSTRUCTION
Exterior Wall	19	COMMON BRK 100
Roof Structur	03	GABLE/HIP 100
Roof Cover	03	COMP SHNGL 100
Interior Wall	01	MINIMUM 100
Interior Floo	14	CARPET 100
Air Condition	03	CENTRAL 100
Heating Type	04	AIR DUCTED 100
Fixtures		30 100
Frame	04	REIN CONC 100
Story Height		0 100
RMS		20 100
Stories	0	0 100
Units		0 100
Condition Adj	03	03 100
Quality	07	07
DOR CODE	7100	CHURCHES-EX
MAP NUM		MKT AREA 06
NEIGHBORHOOD/LOC	3417.00	1.00/

AREA TYPE	TOTAL GROSS AREA	PCT OF BASE	YEAR	TOT ADJ AREA	SUBAREA MARKET VALUE
BAS	1,512	100		1,512	54,228
BAS	20,362	100		20,362	730,283
CAN	18	30		5	180
CAN	20	30		6	215
CAN	24	30		7	251
CAN	70	30		21	753
CAN	240	30		72	2,583
CAN	312	30		94	3,372
CAN	672	30		202	7,245
UST	180	40		72	2,583
TOTALS	23,610			22,433	804,560

MARKET ADJUSTMENTS

TYPE	MDL	EFF. AREA	TOT ADJ PTS	EFF. BASE RATE	REPL. COST NEW	AYB	EYB	ECON	FNCT		NORM	% COND
9100	04	22,433	93.1608	71.73	1,609,119	1980	1980	0	0	0	50.00	50.00

1 CHURCH 0% - 0 Heated Area: 21874 HX Base Yr

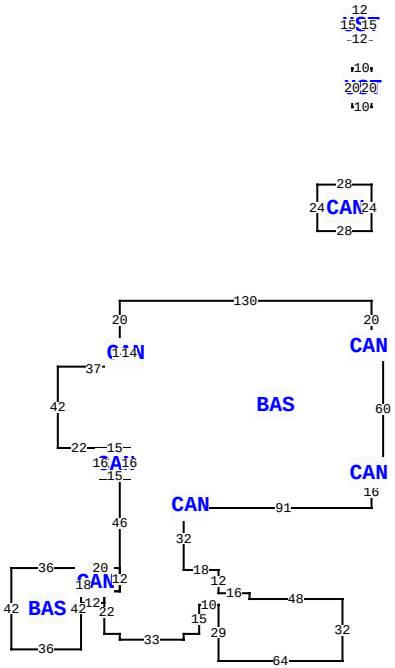

** This building has 11 Sub-Areas

909 SE COUNTRY CLUB RD, LAKE CITY

BLD DATE		LGL DATE	
XF DATE		LAND DATE	04/10/2025 MLU
INC DATE		AG DATE	

VALUATION SUMMARY

VALUATION BY		STANDARD
Tax Group: 2	Tax Dist:	
BUILDING MARKET VALUE		804,560
TOTAL MARKET OB/XF VALUE		66,160
TOTAL LAND VALUE - MARKET		45,000
TOTAL MARKET VALUE		915,720
SOH/AGL Deduction		0
ASSESSED VALUE		915,720
TOTAL EXEMPTION VALUE	02	915,720
BASE TAXABLE VALUE		0
TOTAL JUST VALUE		915,720
NCON VALUE		0
INCOME VALUE		
PREVIOUS YEAR MKT VALUE		915,720

PERMIT NUM	DESCRIPTION	AMT	ISSUED

SALES DATA

OFF RECORD Number	DATE	TYPE INST	Q U	V I	RSN CD	SALE PRICE

BUILDING NOTES

BUILDING DIMENSIONS

BAS= W130 S20 CAN= S14 E5 N14 W5$ E5 S14 W37 S42 E22 CAN= S16 E15 N16 W15$ E15 S16W5 S46 CAN= W20 BAS= W36 S42E36 N42$ S18 E12 N6 E8 N12$ S12 W8 S22 E8 S3 E33 N3 E8 N15E10 S29 E64 N32 W48 N3 W16 N12W18 N32 CAN= E6 N3 W6 S3$ N3 E6 S3 E91 N16 CAN= N5 W4 S5 E4$ W4 N5 E10 N60W6 CAN= N6 W4 S6 E4$ W4 N6 E4 N20$ PTR= N60 CAN= W28 S24 E28 N24$ S60$ PTR=N120 UST= W10 S20 E10 N20$S120$ PTR=N150 UST= W12 S15 E12 N15$ S150$.

EXTRA FEATURES

LN	OB/XF CODE	DESCRIPTION	BLD	CAP	L	W	UNITS	UT	Adj R	ADJ UNIT PRICE	ORIG COND	YEAR ON	YEAR ACTUAL	Q	% COND	OB/XF MKT VALUE	NOTES
1	0260	PAVEMENT-A	0	0	0	0	1.00	UT	0.00	0.00	100	0	0	3	100	50,700	
2	0166	CONC,PAVMT	0	0	0	0	1.00	UT	0.00	0.00	100	0	0	3	100	8,060	
3	0140	CLFENCE 6	0	0	0	0	1.00	UT	0.00	0.00	100	0	0	3	100	7,000	
4	0169	FENCE/WOOD	0	0	0	0	1.00	UT	0.00	0.00	100	2012	2012	3	100	400	

LAND DESCRIPTION

TOTAL OB/XF 66,160

LN	USE CODE	CLS	LAND USE DESCRIPTION	CAP	RD	LOC ZONE	FRONT	DEPTH	TOT LND UTS	UNIT TYPE	DT	DPTH FACT	% COND	TOT ADJ	UNIT PRICE	ADJ UNIT PRICE	LAND VALUE	OTHER ADJUSTMENTS AND NOTES	YEAR	DENSITY	DECL	FRZ	YR	CONSRV
1	7100	C	CHURCH	0		A-1	0.00	0.00	5.00	AC		1.00	1.00	1.00	9,000.00	9,000.00	45,000							

REVIEW DATE 03/16/2017 BY DF Total Acres: 5.00 Total Land Value: 45,000 Market: 0 Agricultural: 0 Common: 45,000 PRINTED 11/19/2025 BY SYS