LOTS 9 & 10 LAUREL LAKE S/D PHAS
WD 1271-1449, WD 1393-2777,

FARRELL DANIEL RAYMOND
247 SW CAMPHOR CT
LAKE CITY, FL 32024-6710

2025

03-4S-16-02732-310

COLUMBIA COUNTY PROPERTY

BUILDING CHARACTERISTICS

ELEMENT	CD	CONSTRUCTION
Exterior Wall	32	HARDIE BRD 100
Roof Structur	08	IRREGULAR 100
Roof Cover	03	COMP SHNGL 100
Interior Wall	05	DRYWALL 100
Interior Floo	12	HARDWOOD 80
Interior Floo	15	HARDTILE 20
Air Condition	03	CENTRAL 100
Heating Type	04	AIR DUCTED 100
Bedrooms		4 100
Bathrooms		3 100
Frame	02	WOOD FRAME 100
Stories	1.	1. 100
Architectual	05	CONV 100
Units		0 100
Quality	06	06

DOR CODE	0100	SINGLE FAMILY	
MAP NUM		MKT AREA	06
NEIGHBORHOOD/LOC	3416.00	1.00/	

AREA TYPE	TOTAL GROSS AREA	PCT OF BASE	YEAR	TOT ADJ AREA	SUBAREA MARKET VALUE
BAS	2,616	100		2,616	323,945
FGR	664	55		365	45,199
FOP	64	30		19	2,352
FOP	408	30		122	15,107
UOP	64	20		13	1,610
TOTALS	3,816			3,135	388,213

MARKET ADJUSTMENTS

TYPE	MDL	EFF. AREA	TOT ADJ PTS	EFF. BASE RATE	REPL. COST NEW	AYB	EYB	ECON	FNCT		NORM	% COND
0100	01	3,135	120.1830	134.60	421,971	2016	2016	0	0	0	8.00	92.00

1 SINGLE FAM – 0% - 0 Heated Area: 2616 HX Base Yr

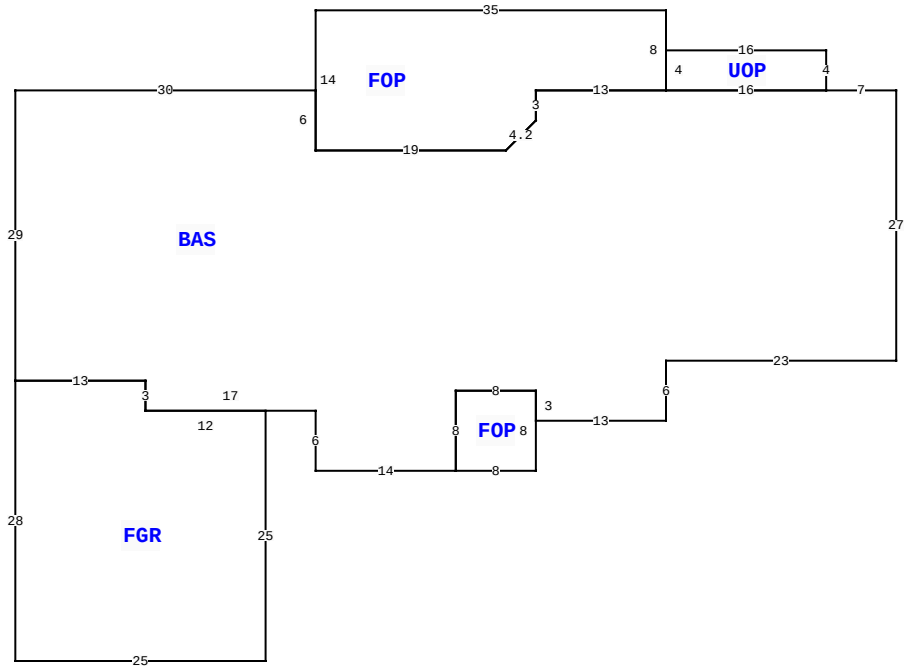

247 SW CAMPHOR CT, LAKE CITY

BLD DATE		LGL DATE	
XF DATE		LAND DATE	05/09/2025 MLU
INC DATE		AG DATE	

VALUATION SUMMARY

VALUATION BY	STANDARD
Tax Group: 2	Tax Dist:
BUILDING MARKET VALUE	388,213
TOTAL MARKET OB/XF VALUE	5,112
TOTAL LAND VALUE - MARKET	81,600
TOTAL MARKET VALUE	474,925
SOH/AGL Deduction	15,390
ASSESSED VALUE	459,535
TOTAL EXEMPTION VALUE	0
BASE TAXABLE VALUE	459,535
TOTAL JUST VALUE	474,925
NCON VALUE	0
INCOME VALUE	
PREVIOUS YEAR MKT VALUE	434,226

PERMIT NUM	DESCRIPTION	AMT	ISSUED
32576	SFR	803	12/30/2014

SALES DATA

OFF RECORD Number	DATE	TYPE INST	Q U	V I	RSN CD	SALE PRICE
1393/2777	9/05/2019	WD	Q	I	01	329,900
GRANTOR: BLAKE W & WHITNEY GRA						
GRANTEE: DANIEL RAYMOND FARR						
1271/1449	3/24/2014	WD	U	V	38	18,000
GRANTOR: PHOENIX LAND DEVELOPM						
GRANTEE: BLAKE W & WHITNEY G						

BUILDING NOTES

BUILDING DIMENSIONS

BAS= W7 UOP= N4 W16 S4 E16$ W16 FOP= N8 W35 S14 E19 R3 U3 N3 E13$ W13 S3 D3 L3 W19 N6 W30 S29 FGR= S28 E25 N25 W12 N3 W13$ E13 S3 E17 S6 E14 FOP= E8 N8 W8 S8$ N8 E8 S3 E13 N6 E23 N27$.

EXTRA FEATURES

LN	OB/XF CODE	DESCRIPTION	BLD	CAP	L	W	UNITS	UT	Adj R	ADJ UNIT PRICE	ORIG COND	YEAR ON	YEAR ACTUAL	Q	% COND	OB/XF MKT VALUE	NOTES
1	0190	FPLC PF	0	0	0	0	1.00	UT	1,200.00	1,200.00	100	2016	2016	3	100	1,200	
2	0166	CONC,PAVMT	0	0	0	0	1,956.00	UT	2.00	2.00	100	2016	2016	3	100	3,912	

LAND DESCRIPTION

TOTAL OB/XF 5,112

LN	USE CODE	CLS	LAND USE DESCRIPTION	CAP	RD	LOC ZONE	FRONT	DEPTH	TOT LND UTS	UNIT TYPE	DT	DPTH FACT	% COND	TOT ADJ	UNIT PRICE	ADJ UNIT PRICE	LAND VALUE	OTHER ADJUSTMENTS AND NOTES	YEAR	DENSITY	DECL	FRZ	YR	CONSRV
1	0100	C	SFR	0		RSF-2	0.00	0.00	1.00	LT		1.00	1.00	1.36	30,000.00	40,800.00	40,800							
2	0000	C	VAC RES	0		RSF-2	0.00	0.00	1.00	LT		1.00	1.00	1.36	30,000.00	40,800.00	40,800							

REVIEW DATE 09/26/2023 BY JB Total Acres: 1.41 Total Land Value: 81,600 Market: 0 Agricultural: 0 Common: 81,600 PRINTED 06/20/2025 BY SYS