LOT 4 LAUREL LAKE S/D.
885-1757, 918-544, WD 1039-2902,

PHILLIPS ALTON C/PHILLIPS PATRICIA A
230 SW RED MAPLE WAY
LAKE CITY, FL 32025

2026

03-4S-16-02732-104

COLUMBIA COUNTY PROPERTY

BUILDING CHARACTERISTICS

ELEMENT	CD	CONSTRUCTION
Exterior Wall	32	HARDIE BRD 100
Roof Structur	08	IRREGULAR 100
Roof Cover	03	COMP SHNGL 100
Interior Wall	05	DRYWALL 100
Interior Floo	14	CARPET 80
Interior Floo	15	HARDTILE 20
Air Condition	03	CENTRAL 100
Heating Type	04	AIR DUCTED 100
Bedrooms		3 100
Bathrooms		2 100
Frame	02	WOOD FRAME 100
Stories	1.5	1.5 100
Architectual	05	CONV 100
Units		0 100
Condition Adj	03	03 100
Kitchen Adjus	01	01 100
Quality	07	07
DOR CODE	0100	SINGLE FAMILY
MAP NUM		MKT AREA 06
NEIGHBORHOOD/LOC	3416.00	1.00/

AREA TYPE	TOTAL GROSS AREA	PCT OF BASE	YEAR	TOT ADJ AREA	SUBAREA MARKET VALUE
BAS	1,731	100		1,731	181,304
FGR	537	55		295	30,898
FOP	203	30		61	6,389
FOP	249	30		75	7,856
FST	32	55		18	1,886
FUS	312	100		312	32,678
TOTALS	3,064			2,492	261,011

MARKET ADJUSTMENTS

TYPE	MDL	EFF. AREA	TOT ADJ PTS	EFF. BASE RATE	REPL. COST NEW	AYB	EYB	ECON	FNCT		NORM	% COND
0100	01	2,492	126.3755	141.54	352,718	1999	1999	0	0	0	26.00	74.00

1 SINGLE FAM 100% - 2006 Heated Area: 2043 HX Base Yr 2006

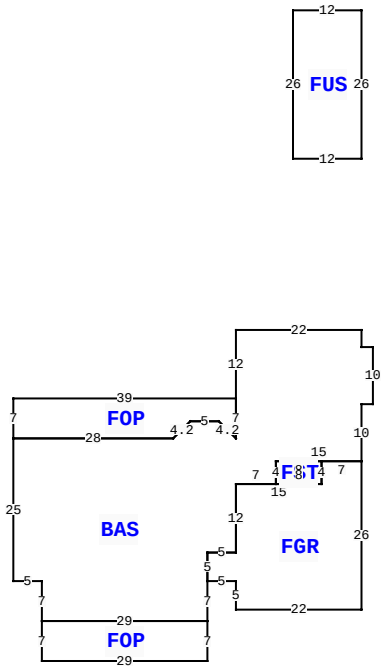

230 SW RED MAPLE WAY, LAKE CITY

BLD DATE		LGL DATE	
XF DATE		LAND DATE	05/09/2025 MLU
INC DATE		AG DATE	

VALUATION SUMMARY

VALUATION BY		STANDARD
Tax Group: 2	Tax Dist:	
BUILDING MARKET VALUE		261,011
TOTAL MARKET OB/XF VALUE		5,805
TOTAL LAND VALUE - MARKET		30,000
TOTAL MARKET VALUE		296,816
SOH/AGL Deduction		109,884
ASSESSED VALUE		186,932
TOTAL EXEMPTION VALUE	HX HB VX	55,722
BASE TAXABLE VALUE		131,210
TOTAL JUST VALUE		296,816
NCON VALUE		0
INCOME VALUE		
PREVIOUS YEAR MKT VALUE		300,343

PERMIT NUM	DESCRIPTION	AMT	ISSUED
000043544	Roof Replacement	13,800	01/18/2022
15807	SFR	325	07/21/1999

SALES DATA

OFF RECORD Number	DATE	TYPE INST	Q U	V I	RSN CD	SALE PRICE
1510/363	3/07/2024	LE	U	I	14	100
GRANTOR: PHILLIPS ALTON C						
GRANTEE: PHILLIPS ALTON C (E						
1039/2902	3/01/2005	WD	Q	I		180,000
GRANTOR: FREDERICK A KOEHLER						
GRANTEE: ALTON C & PATRICIA						

BUILDING NOTES

BUILDING DIMENSIONS

BAS= W22 S12 FOP= W39 S7 E28 U3 R3 E5 R3 D3 N7$ S7 U3 L3 W5 L3 D3 W28 S25 E5 S7 FOP= S7 E29 N7 W29$ E29 N7 FGR= E5 S5 E22 N26 W7 FST= W8 S4 E8 N4$ S4 W15 S12 W5 S5$ N5 E5 N12 E7 N4 E15 N10 E2 N10 W2 N3$ PTR= N30 FUS= N26 W12 S26 E12$ S30$.

EXTRA FEATURES

LN	OB/XF CODE	DESCRIPTION	BLD	CAP	L	W	UNITS	UT	Adj R	ADJ UNIT PRICE	ORIG COND	YEAR ON	YEAR ACTUAL	Q	% COND	OB/XF MKT VALUE	NOTES
1	0190	FPLC PF	0	100	0	0	1.00	UT	1,200.00	1,200.00	100	1999	1999	3	100	1,200	
2	0166	CONC,PAVMT	0	100	0	0	2,170.00	UT	1.50	1.50	100	1999	1999	3	100	3,255	
3	0120	CLFENCE 4	0	100	0	0	1.00	UT	1,800.00	1,800.00	75	2007	2007	3	75	1,350	

LAND DESCRIPTION

TOTAL OB/XF 5,805

LN	USE CODE	CLS	LAND USE DESCRIPTION	CAP	RD	LOC ZONE	FRONT	DEPTH	TOT LND UTS	UNIT TYPE	DT	DPTH FACT	% COND	TOT ADJ	UNIT PRICE	ADJ UNIT PRICE	LAND VALUE	OTHER ADJUSTMENTS AND NOTES	YEAR	DENSITY	DECL	FRZ	YR	CONSRV
1	0100	C	SFR	100		RSF-2	0.00	0.00	1.00	LT		1.00	1.00	1.00	30,000.00	30,000.00	30,000							

REVIEW DATE 09/26/2023 BY JB Total Acres: 0.50 Total Land Value: 30,000 Market: 0 Agricultural: 0 Common: 30,000 PRINTED 11/06/2025 BY SYS