LOT 105 PRESERVE AT LAUREL
LAKE UNIT 1, WD 1260-2080, WD
1270-2574, WD 1274-1740, WD

CHEN HAO/ZHENH QIANYING
563 SW ROSEMARY DR
LAKE CITY, FL 32024

2026

03-4S-16-02731-105

COLUMBIA COUNTY PROPERTY

BUILDING CHARACTERISTICS

ELEMENT	CD	CONSTRUCTION
Exterior Wall	32	HARDIE BRD 100
Roof Structur	08	IRREGULAR 100
Roof Cover	03	COMP SHNGL 100
Interior Wall	05	DRYWALL 100
Interior Floo	12	HARDWOOD 80
Interior Floo	14	CARPET 20
Air Condition	03	CENTRAL 100
Heating Type	04	AIR DUCTED 100
Bedrooms		3 100
Bathrooms		4 100
Frame	02	WOOD FRAME 100
Stories	1.	1. 100
Architectual	05	CONV 100
Units		0 100
Quality	07	07

DOR CODE 0100 SINGLE FAMILY
MAP NUM | MKT AREA 06
NEIGHBORHOOD/LOC 3416.0400 1.10/

AREA TYPE	TOTAL GROSS AREA	PCT OF BASE	YEAR	TOT ADJ AREA	SUBAREA MARKET VALUE
BAS	2,627	100		2,627	372,339
FGR	528	55		290	41,103
FOP	140	30		42	5,953
FOP	140	30		42	5,953
FSP	220	40	2024	88	12,472
FUS	220	100		220	31,182
TOTALS	3,875			3,309	469,002

MARKET ADJUSTMENTS

TYPE	MDL	EFF. AREA	TOT ADJ PTS	EFF. BASE RATE	REPL. COST NEW	AYB	EYB	ECON	FNCT		NORM	% COND
0100	01	3,309	125.0524	154.06	509,785	2017	2017	0	0	0	8.00	92.00

1 SINGLE FAM 0% - 2021 Heated Area: 2847 HX Base Yr

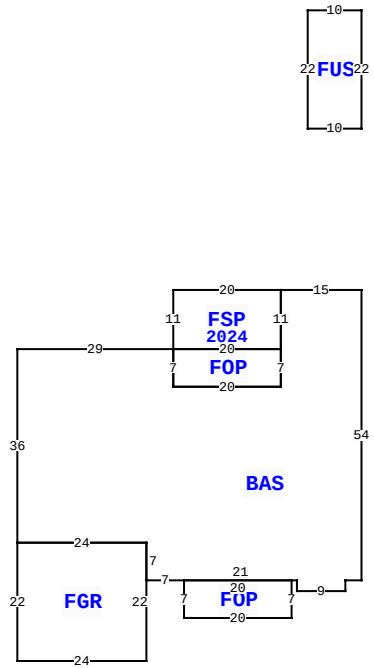

563 SW ROSEMARY DR, LAKE CITY

BLD DATE		LGL DATE	
XF DATE		LAND DATE	04/03/2025 MLU
INC DATE		AG DATE	

VALUATION SUMMARY

VALUATION BY	STANDARD
Tax Group: 2	Tax Dist:
BUILDING MARKET VALUE	469,002
TOTAL MARKET OB/XF VALUE	5,286
TOTAL LAND VALUE - MARKET	38,500
TOTAL MARKET VALUE	512,788
SOH/AGL Deduction	0
ASSESSED VALUE	512,788
TOTAL EXEMPTION VALUE	0
BASE TAXABLE VALUE	512,788
TOTAL JUST VALUE	512,788
NCON VALUE	0
INCOME VALUE	
PREVIOUS YEAR MKT VALUE	517,886

PERMIT NUM	DESCRIPTION	AMT	ISSUED
31818	SFR	974	03/18/2014

SALES DATA

OFF RECORD Number	DATE	TYPE INST	Q U	V I	RSN CD	SALE PRICE
1421/0413	10/05/2020	WD	Q	I	01	392,900
GRANTOR: AARON & MEGHAN NICKEL						
GRANTEE: HAO CHEN & QIANYING						
1333/1909	3/29/2017	WD	Q	I	01	337,000
GRANTOR: PRESERVE AT LAUREL LA						
GRANTEE: AARON & MEGHAN NICK						

BUILDING NOTES

BUILDING DIMENSIONS

BAS=[ORIG=0,0] W15 S11 S7 W20 N7 W29 S36 E24 S7 E7 E21 S2 E9 N2 E3 N54 $
FGR=[ORIG=-64,47] S22 E24 N22 W24 $
FUS=[ORIG=0,-30] N22 W10 S22 E10 $
FOP=[ORIG=-15,11] W20 S7 E20 N7 $
FOP=[ORIG=-33,54] S7 E20 N7 W20 $
PTR=[ORIG=0,0] N30 S30 $
FSP=[YR=2024;ORIG=-35,0] E20 S11 W20 N11 $
.

EXTRA FEATURES

LN	OB/XF CODE	DESCRIPTION	BLD	CAP	L	W	UNITS	UT	Adj R	ADJ UNIT PRICE	ORIG COND	YEAR ON	YEAR ACTUAL	Q	% COND	OB/XF MKT VALUE	NOTES
1	0190	FPLC PF	0	0	0	0	1.00	UT	1,200.00	1,200.00	100	2017	2017	3	100	1,200	
2	0166	CONC,PAVMT	0	0	0	0	843.00	UT	2.00	2.00	100	2017	2017	3	100	1,686	
3	0169	FENCE/WOOD	0	0	0	0	1.00	UT	2,400.00	2,400.00	100	2024	2023		100	2,400	

LAND DESCRIPTION

TOTAL OB/XF 5,286

LN	USE CODE	CLS	LAND USE DESCRIPTION	CAP	RD	LOC ZONE	FRONT	DEPTH	TOT LND UTS	UNIT TYPE	DT	DPTH FACT	% COND	TOT ADJ	UNIT PRICE	ADJ UNIT PRICE	LAND VALUE	OTHER ADJUSTMENTS AND NOTES	YEAR	DENSITY	DECL	FRZ	YR	CONSRV
1	0100	C	SFR	0		PRD	0.00	0.00	1.00	LT		1.00	1.00	1.10	35,000.00	38,500.00	38,500							

REVIEW DATE 09/22/2023 BY KS Total Acres: 0.37 Total Land Value: 38,500 Market: 0 Agricultural: 0 Common: 38,500 PRINTED 11/18/2025 BY SYS