LOT 58 AND THE E 1/2 OF LOT 59
LAUREL LAKE UNIT 1.

YAXLEY CHRISTINE JOYCE
148 SW SILVER PALM DR
LAKE CITY, FL 32024

2026

03-4S-16-02731-058

COLUMBIA COUNTY PROPERTY

BUILDING CHARACTERISTICS

ELEMENT	CD	CONSTRUCTION
Exterior Wall	32	HARDIE BRD 100
Roof Structur	08	IRREGULAR 100
Roof Cover	03	COMP SHNGL 100
Interior Wall	05	DRYWALL 100
Interior Floo	14	CARPET 80
Interior Floo	15	HARDTILE 20
Air Condition	03	CENTRAL 100
Heating Type	04	AIR DUCTED 100
Bedrooms		5 100
Bathrooms		4 100
Frame	02	WOOD FRAME 100
Stories	2.	2. 100
Architectual	05	CONV 100
Units		0 100
Condition Adj	04	04 100
Quality	08	08

DOR CODE 0100 SINGLE FAMILY
MAP NUM | MKT AREA 06
NEIGHBORHOOD/LOC 3416.0400 1.10/

AREA TYPE	TOTAL GROSS AREA	PCT OF BASE	YEAR	TOT ADJ AREA	SUBAREA MARKET VALUE
BAS	2,473	100		2,473	423,217
FGR	484	55		266	45,522
FOP	172	30		52	8,899
FOP	588	30		176	30,119
FUS	869	100		869	148,716
TOTALS	4,586			3,836	656,474

MARKET ADJUSTMENTS

TYPE	MDL	EFF. AREA	TOT ADJ PTS	EFF. BASE RATE	REPL. COST NEW	AYB	EYB	ECON	FNCT		NORM	% COND
0100	01	3,836	154.3394	190.15	729,415	2015	2015	0	0	0	10.00	90.00

1 SINGLE FAM 100% - 2023 Heated Area: 3342 HX Base Yr 2023

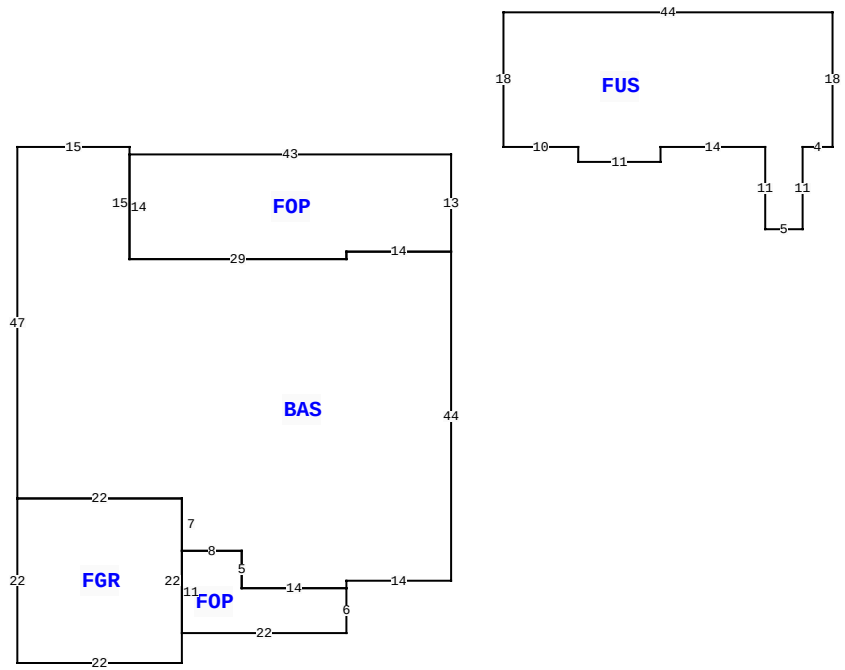

148 SW SILVER PALM DR, LAKE CITY

BLD DATE		LGL DATE	
XF DATE		LAND DATE	04/03/2025 MLU
INC DATE		AG DATE	

VALUATION SUMMARY

VALUATION BY		STANDARD
Tax Group: 2	Tax Dist:	
BUILDING MARKET VALUE		656,474
TOTAL MARKET OB/XF VALUE		3,306
TOTAL LAND VALUE - MARKET		57,750
TOTAL MARKET VALUE		717,530
SOH/AGL Deduction		101,285
ASSESSED VALUE		616,245
TOTAL EXEMPTION VALUE	HX HB	50,722
BASE TAXABLE VALUE		565,523
TOTAL JUST VALUE		717,530
NCON VALUE		0
INCOME VALUE		
PREVIOUS YEAR MKT VALUE		724,824

PERMIT NUM	DESCRIPTION	AMT	ISSUED
32451	SFR	1,261	11/04/2014

SALES DATA

OFF RECORD Number	DATE	TYPE INST	Q U	V I	RSN CD	SALE PRICE
1456/1273	1/06/2022	WD	Q	I	01	605,000
GRANTOR: FULLER BRADY						
GRANTEE: YAXLEY CHRISTINE JO						
1431/20	2/19/2021	WD	U	I	37	479,000
GRANTOR: STAUDINGER CHRISTOPHE						
GRANTEE: FULLER BRADY						

BUILDING NOTES

BUILDING DIMENSIONS

BAS= W15 S47 FGR= S22 E22 N22 W22$ E22 S7 FOP= S11 E22 N6 W14 N5 W8$ E8 S5 E14 N1 E14 N44 FOP= N13 W43 S14 E29 N1 E14$ W14 S1 W29 N15 $ PTR= E50 FUS= E10 S2 E11 N2 E14 S11 E5 N11 E4 N18 W44 S18$ W50$.

EXTRA FEATURES

L N	OB/XF CODE	DESCRIPTION	BLD	CAP	L	W	UNITS	UT	Adj R	ADJ UNIT PRICE	ORIG COND	YEAR ON	YEAR ACTUAL	Q	% COND	OB/XF MKT VALUE	NOTES
1	0166	CONC,PAVMT	0	100	0	0	653.00	UT	2.00	2.00	100	2015	2015	3	100	1,306	
2	0294	SHED WOOD/	0	100	0	0	1.00	UT	2,000.00	2,000.00	100	2024	2023		100	2,000	

LAND DESCRIPTION

TOTAL OB/XF 3,306

L N	USE CODE	CLS	LAND USE DESCRIPTION	CAP	R D	LOC ZONE	FRONT	DEPTH	TOT LND UTS	UNIT TYPE	D T	DPTH FACT	% COND	TOT ADJ	UNIT PRICE	ADJ UNIT PRICE	LAND VALUE	OTHER ADJUSTMENTS AND NOTES	YEAR	DENSITY	DECL	FRZ	YR	CONSRV
1	0100	C	SFR	100		PRD	0.00	0.00	1.50	LT		1.00	1.00	1.10	35,000.00	38,500.00	57,750							

REVIEW DATE 09/22/2023 BY KS Total Acres: 0.35 Total Land Value: 57,750 Market: 0 Agricultural: 0 Common: 57,750 PRINTED 11/18/2025 BY SYS