LOT 1 BLOCK B UNIT 1 OLUSTEE CRE
EX 0.03 AC DESC ORB 789-1815.

GARBER SPENCER
135 SE BALD EAGLE LP
LAKE CITY, FL 32025-2820

2026

02-6S-17-09533-111

COLUMBIA COUNTY PROPERTY

BUILDING CHARACTERISTICS

ELEMENT	CD	CONSTRUCTION
Exterior Wall	32	HARDIE BRD 100
Roof Structur	03	GABLE/HIP 100
Roof Cover	12	MODULAR MT 100
Interior Wall	05	DRYWALL 100
Interior Floo	12	HARDWOOD 60
Interior Floo	08	SHT VINYL 40
Air Condition	03	CENTRAL 100
Heating Type	04	AIR DUCTED 100
Bedrooms		3 100
Bathrooms		2 100
Frame	02	WOOD FRAME 100
Stories	1.	1. 100
Architectual	05	CONV 100
Units		0 100
Condition Adj	03	03 100
Kitchen Adjus	01	01 100
Quality	05	05
DOR CODE	0100	SINGLE FAMILY
MAP NUM		MKT AREA 02
NEIGHBORHOOD/LOC	2617.0100	1.00/

AREA TYPE	TOTAL GROSS AREA	PCT OF BASE	YEAR	TOT ADJ AREA	SUBAREA MARKET VALUE
BAS	1,310	100		1,310	130,693
FOP	140	30		42	4,190
FOP	160	30		48	4,789
UCP	192	20		38	3,791
UCP	360	20		72	7,183
UDU	408	55		224	22,347
TOTALS	2,570			1,734	172,993

MARKET ADJUSTMENTS

TYPE	MDL	EFF. AREA	TOT ADJ PTS	EFF. BASE RATE	REPL. COST NEW	AYB	EYB	ECON	FNCT		NORM	% COND
0100	01	1,734	117.2080	131.27	227,622	2001	2001	0	0	0	24.00	76.00

1 SINGLE FAM 100% - 2011 Heated Area: 1310 HX Base Yr 2011

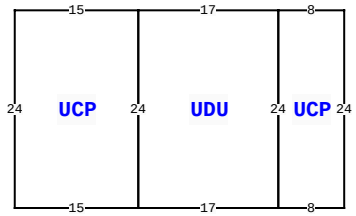

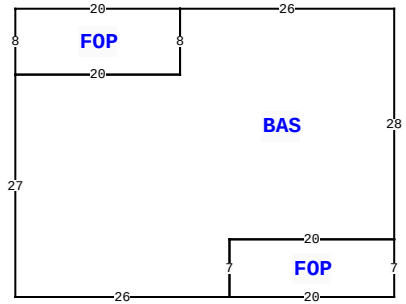

135 SE BALD EAGLE LOOP, LAKE CITY

BLD DATE		LGL DATE	
XF DATE		LAND DATE	03/17/2022 MLU
INC DATE		AG DATE	

VALUATION SUMMARY

VALUATION BY		STANDARD
Tax Group: 3	Tax Dist:	
BUILDING MARKET VALUE		172,993
TOTAL MARKET OB/XF VALUE		200
TOTAL LAND VALUE - MARKET		15,000
TOTAL MARKET VALUE		188,193
SOH/AGL Deduction		70,351
ASSESSED VALUE		117,842
TOTAL EXEMPTION VALUE	HX HB	50,722
BASE TAXABLE VALUE		67,120
TOTAL JUST VALUE		188,193
NCON VALUE		0
INCOME VALUE		
PREVIOUS YEAR MKT VALUE		190,469

PRMT:2:1: TVL TRL 6MTS

SALE:3:1: LOT VALUED @4500 W,S,E ADDED AFTER SALE

PRMT:1:1: TVL TRL

SALE:2:1: INCLUDED 09533-112 & 09533-231

PERMIT NUM	DESCRIPTION	AMT	ISSUED
18212	SFR	232	04/26/2001
18066	M H	75	03/16/2001
15895	M H	75	08/12/1999

SALES DATA

OFF RECORD Number	DATE	TYPE INST	Q U	V I	RSN CD	SALE PRICE
1205/1972	10/28/2010	WD	Q	I	01	95,000
GRANTOR: STEWART'S						
GRANTEE: SPENCER GARBER						
0875/1883	2/16/1999	WD	Q	V	03	5,000
GRANTOR: GENNARDO'S						
GRANTEE: STEWART'S						

BUILDING NOTES

BUILDING DIMENSIONS

BAS= W26 FOP= W20 S8 E20 N8$ S8 W20 S27 E26 FOP= E20 N7 W20 S7$ N7 E20 N28$ PTR= N20 UCP= N24 W8 UDU= W17 UCP= W15 S24 E15 N24$ S24 E17 N24$ S24 E8$ S20$.

EXTRA FEATURES

LN	OB/XF CODE	DESCRIPTION	BLD	CAP	L	W	UNITS	UT	Adj R	ADJ UNIT PRICE	ORIG COND	YEAR ON	YEAR ACTUAL	Q	% COND	OB/XF MKT VALUE	NOTES
1	0294	SHED WOOD/	0	100	0	0	1.00	UT	0.00	0.00	100	2017	2017	3	100	200	

LAND DESCRIPTION

TOTAL OB/XF 200

LN	USE CODE	CLS	LAND USE DESCRIPTION	CAP	RD	LOC ZONE	FRONT	DEPTH	TOT LND UTS	UNIT TYPE	DT	DPTH FACT	% COND	TOT ADJ	UNIT PRICE	ADJ UNIT PRICE	LAND VALUE	OTHER ADJUSTMENTS AND NOTES	YEAR	DENSITY	DECL	FRZ	YR	CONSRV
1	0100	C	SFR	100		A-1	135.00	220.00	1.00	LT		1.00	1.00	1.00	15,000.00	15,000.00	15,000							

REVIEW DATE 09/25/2017 BY DF Total Acres: 0.68 Total Land Value: 15,000 Market: 0 Agricultural: 0 Common: 15,000 PRINTED 11/18/2025 BY SYS