COMM NE COR, RUN W 1326.84 FT
TO S R/W SR-47, RUN S55 DG W
.95 FT, S 2000 FT FOR POB, S

LOFSTROM BENJAMIN
443 SW FAUL CT
LAKE CITY, FL 32024

2026

02-5S-16-03426-001

COLUMBIA COUNTY PROPERTY

BUILDING CHARACTERISTICS

ELEMENT	CD	CONSTRUCTION
Exterior Wall	32	HARDIE BRD 100
Roof Structur	08	IRREGULAR 100
Roof Cover	03	COMP SHNGL 100
Interior Wall	05	DRYWALL 100
Interior Floo	12	HARDWOOD 80
Interior Floo	15	HARDTILE 20
Air Condition	03	CENTRAL 100
Heating Type	04	AIR DUCTED 100
Bedrooms		3 100
Bathrooms		2 100
Frame	02	WOOD FRAME 100
Stories	1.	1. 100
Architectual	05	CONV 100
Units		0 100
Quality	07	07
DOR CODE	5000	IMPROVED AG
MAP NUM		MKT AREA 01
NEIGHBORHOOD/LOC	2516.00	1.00/

AREA TYPE	TOTAL GROSS AREA	PCT OF BASE	YEAR	TOT ADJ AREA	SUBAREA MARKET VALUE
BAS	2,379	100		2,379	301,405
FGR	964	55		530	67,148
FHS	494	60		296	37,501
FOP	428	30		128	16,216
FOP	612	30		184	23,311
TOTALS	4,877			3,517	445,583

MARKET ADJUSTMENTS

TYPE	MDL	EFF. AREA	TOT ADJ PTS	EFF. BASE RATE	REPL. COST NEW	AYB	EYB	ECON	FNCT		NORM	% COND
0100	01	3,517	121.6380	136.23	479,121	2018	2018	0	0	0	7.00	93.00

2 SINGLE FAM 100% - 2020 Heated Area: 2873 HX Base Yr 2020

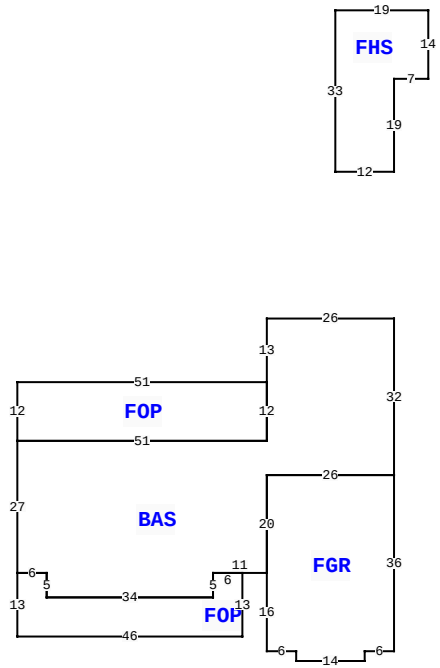

443 SW FAUL CT, LAKE CITY

BLD DATE		LGL DATE	
XF DATE		LAND DATE	04/07/2025 MLU
INC DATE		AG DATE	

VALUATION SUMMARY

VALUATION BY		STANDARD
Tax Group: 3	Tax Dist:	
BUILDING MARKET VALUE		445,583
TOTAL MARKET OB/XF VALUE		2,724
TOTAL LAND VALUE - MARKET		98,460
TOTAL MARKET VALUE		503,080
SOH/AGL Deduction		135,122
ASSESSED VALUE		367,958
TOTAL EXEMPTION VALUE	HX HB	50,722
BASE TAXABLE VALUE		317,236
TOTAL JUST VALUE		546,767
NCON VALUE		0
INCOME VALUE		
PREVIOUS YEAR MKT VALUE		551,558

PERMIT NUM	DESCRIPTION	AMT	ISSUED
40643	ELECTRICAL	0	09/30/2020
35763	SFR	1,333	09/06/2017

SALES DATA

OFF RECORD Number	DATE	TYPE INST	Q U /	V I /	RSN CD	SALE PRICE
1400/1936	11/30/2019	WD	U	I	11	100
GRANTOR: AMBER LOFSTROM						
GRANTEE: BENJAMIN LOFSTROM						
1319/1356	7/07/2016	WD	U	I	12	65,000
GRANTOR: NATIONSTAR MORTGAGE L						
GRANTEE: AMBER LOFSTROM (MAR						

BUILDING NOTES

BUILDING DIMENSIONS

BAS= W26 S13 FOP= W51 S12 E51 N12$ S12 W51 S27 FOP= S13 E46 N13 W6 S5 W34 N5 W6$ E6 S5 E34 N5 E11 FGR= S16 E6 S2 E14 N2 E6 N36 W26 S20$ N20 E26 N32$ PTR= N30 FHS= N19 E7 N14 W19 S33 E12$ S30$.

EXTRA FEATURES

LN	OB/XF CODE	DESCRIPTION	BLD	CAP	L	W	UNITS	UT	Adj R	ADJ UNIT PRICE	ORIG COND	YEAR ON	YEAR ACTUAL	Q	% COND	OB/XF MKT VALUE	NOTES
1	0166	CONC,PAVMT	0	100	0	0	1,362.00	UT	2.00	2.00	100	2018	2018	3	100	2,724	

LAND DESCRIPTION

TOTAL OB/XF 2,724

LN	USE CODE	CLS	LAND USE DESCRIPTION	CAP	RD	LOC ZONE	FRONT	DEPTH	TOT LND UTS	UNIT TYPE	DT	DPTH FACT	% COND	TOT ADJ	UNIT PRICE	ADJ UNIT PRICE	LAND VALUE	OTHER ADJUSTMENTS AND NOTES	YEAR	DENSITY	DECL	FRZ	YR	CONSRV
1	0100	C	SFR	100		A-1	0.00	0.00	5.93	AC		1.00	1.00	1.00	9,000.00	9,000.00	53,370							
2	6200	A	PASTURE 3	100		A-1	0.00	0.00	5.01	AC		1.00	1.00	1.00	280.00	280.00	1,403							
3	9910	M	MKT.VAL.AG	0		A-1	0.00	0.00	5.01	AC		1.00	1.00	1.00	9,000.00	9,000.00	45,090							

REVIEW DATE 12/02/2020 BY BC Total Acres: 10.94 Total Land Value: 54,773 Market: 45,090 Agricultural: 1,403 Common: 53,370 PRINTED 11/07/2025 BY SYS