46.90 AC SEC 2-4S-17 AS PER
LEASE FROM CITY OF LAKE CITY
TO DANIELS LUMBER IN ORB 762-

CITY OF LAKE CITY (LEASE PROP)
GREAT SOUTH TIMBER & LUMBER CO, P O BOX 2249
LAKE CITY, FL 32056

2026

02-4S-17-07483-007

COLUMBIA COUNTY PROPERTY

BUILDING CHARACTERISTICS

ELEMENT	CD	CONSTRUCTION
Exterior Wall	05	AVERAGE 100
Roof Structur	11	BOWSTRTRUS 100
Roof Cover	03	COMP SHNGL 100
Interior Wall	02	WALL BD/WD 100
Interior Floo	14	CARPET 90
Interior Floo	06	VINYL ASB 10
Ceiling	01	FIN.SUSPD 100
Air Condition	03	CENTRAL 100
Heating Type	04	AIR DUCTED 100
Fixtures		4 100
Frame	02	WOOD FRAME 100
Story Height		8 100
RMS		7 100
Stories	1.	1. 100
Units		0 100
Condition Adj	03	03 100
Quality	03	03

DOR CODE	8901	MUNICIPAL IMP- NON- EX	
MAP NUM		MKT AREA	06
NEIGHBORHOOD/LOC	2417.00	1.00/	

AREA TYPE	TOTAL GROSS AREA	PCT OF BASE	YEAR	TOT ADJ AREA	SUBAREA MARKET VALUE
BAS	1,408	100		1,408	14,474
CAN	352	30		106	1,090
FCP	880	30		264	2,714
TOTALS	2,640			1,778	18,278

MARKET ADJUSTMENTS

TYPE	MDL	EFF. AREA	TOT ADJ PTS	EFF. BASE RATE	REPL. COST NEW	AYB	EYB	ECON	FNCT	AP	NORM	% COND
4900	04	1,778	69.4575	51.40	91,389	1985	1985	0	0	35	50.00	20.00

1 OFFICE LOW 0% - 0 Heated Area: 1408 HX Base Yr

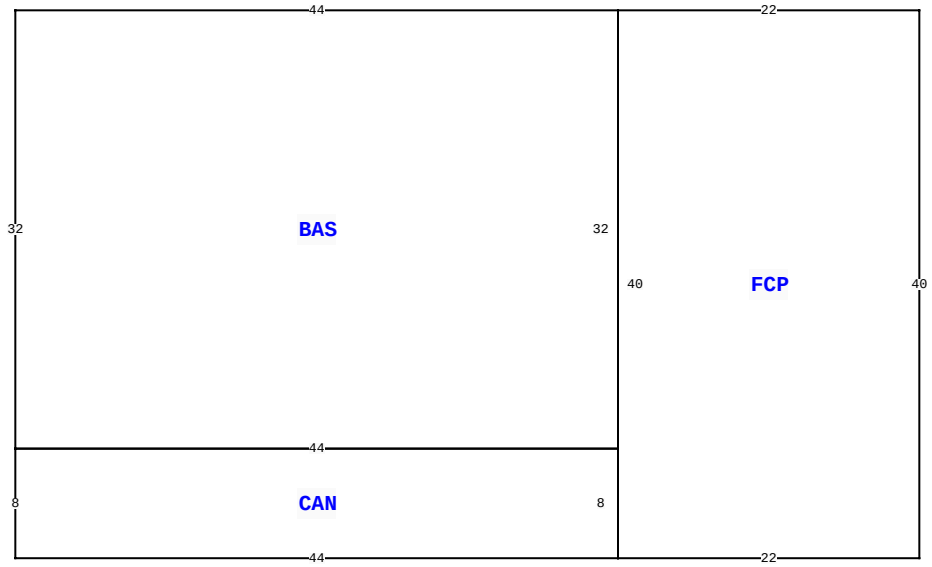

1135 SE STATE ROAD 100 , LAKE CITY

BLD DATE		LGL DATE	
XF DATE		LAND DATE	
INC DATE		AG DATE	

VALUATION SUMMARY

VALUATION BY	STANDARD
Tax Group: 2	Tax Dist:
BUILDING MARKET VALUE	421,368
TOTAL MARKET OB/XF VALUE	134,059
TOTAL LAND VALUE - MARKET	387,100
TOTAL MARKET VALUE	942,527
SOH/AGL Deduction	0
ASSESSED VALUE	942,527
TOTAL EXEMPTION VALUE	0
BASE TAXABLE VALUE	942,527
TOTAL JUST VALUE	942,527
NCON VALUE	0
INCOME VALUE	
PREVIOUS YEAR MKT VALUE	953,379

XFOB:9:1: CONC/METAL BINS (#6)
XFOB:8:1: #5 METAL BARN
XFOB:7:1: WD FRAM BLDG
XFOB:6:1: TIN SHED

PERMIT NUM	DESCRIPTION	AMT	ISSUED
18-204	COMMERCIAL	0	04/20/2018
18-156	COMMERCIAL	0	03/23/2018
3143	STORAGE	1,505	01/26/2005
390	STORAGE	150	03/02/1995

SALES DATA

OFF RECORD Number	DATE	TYPE INST	Q U /	V I /	RSN CD	SALE PRICE

BUILDING NOTES

BUILDING DIMENSIONS

FCP= W22 BAS= W44 S32 CAN= S 8 E44 N8 W44$ E44 N32$ S40 E22N40$.

EXTRA FEATURES

LN	OB/XF CODE	DESCRIPTION	BLD	CAP	L	W	UNITS	UT	Adj R	ADJ UNIT PRICE	ORIG COND	YEAR ON	YEAR ACTUAL	Q	% COND	OB/XF MKT VALUE	NOTES
1	0260	PAVEMENT-A	0	0	0	0	1.00	UT	18,000.00	18,000.00	100	0	0	3	100	18,000	
2	0260	PAVEMENT-A	0	0	0	0	1.00	UT	3,510.00	3,510.00	100	0	0	3	100	3,510	
3	0260	PAVEMENT-A	0	0	0	0	1.00	UT	3,690.00	3,690.00	100	0	0	3	100	3,690	
4	0030	BARN,MT	0	0	0	0	1.00	UT	1,800.00	1,800.00	100	0	0	3	100	1,800	
5	0030	BARN,MT	0	0	0	0	1.00	UT	1,350.00	1,350.00	100	0	0	3	100	1,350	
6	0030	BARN,MT	0	0	0	0	1.00	UT	540.00	540.00	100	0	0	3	100	540	
7	0020	BARN,FR	0	0	0	0	1.00	UT	450.00	450.00	100	0	0	3	100	450	
8	0030	BARN,MT	0	0	0	0	1.00	UT	4,050.00	4,050.00	100	0	0	3	100	4,050	
9	0010	BARN,BLK	0	0	0	0	1.00	UT	1,620.00	1,620.00	100	0	0	3	100	1,620	
10	0030	BARN,MT	0	0	0	0	1.00	UT	2,466.00	2,466.00	100	0	0	3	100	2,466	

TOTAL OB/XF 37,476

LAND DESCRIPTION

LN	USE CODE	CLS	LAND USE DESCRIPTION	CAP	RD	LOC ZONE	FRONT	DEPTH	TOT LND UTS	UNIT TYPE	DT	DPTH FACT	% COND	TOT ADJ	UNIT PRICE	ADJ UNIT PRICE	LAND VALUE	OTHER ADJUSTMENTS AND NOTES	YEAR	DENSITY	DECL	FRZ	YR	CONSRV
1	4300	C	LUMBER YRD	0		I	0.00	0.00	39.50	AC		1.00	1.00	0.70	14,000.00	9,800.00	387,100							

REVIEW DATE 01/15/2019 BY ME Total Acres: 39.50 Total Land Value: 387,100 Market: 0 Agricultural: 0 Common: 387,100 PRINTED 11/17/2025 BY SYS

46.90 AC SEC 2-4S-17 AS PER
LEASE FROM CITY OF LAKE CITY
TO DANIELS LUMBER IN ORB 762-

CITY OF LAKE CITY (LEASE PROP)
GREAT SOUTH TIMBER & LUMBER CO, P O BOX 2249
LAKE CITY, FL 32056

2026

02-4S-17-07483-007

BUILDING CHARACTERISTICS

ELEMENT	CD	CONSTRUCTION
Exterior Wall	25	MOD METAL 100
Roof Structur	11	BOWSTRTRUS 100
Roof Cover	12	MODULAR MT 100
Interior Wall	07	NONE 100
Interior Floo	09	PINE WOOD 100
Ceiling	04	NONE 100
Air Condition	01	NONE 100
Heating Type	01	NONE 100
Plumbing		0 100
Frame	03	MASONRY 100
Story Height		10 100
RMS		1 100
Stories	1.	1. 100
Units		0 100
Condition Adj	03	03 100
Quality	01	01

DOR CODE	8901	MUNICIPAL IMP- NON- EX	
MAP NUM		MKT AREA	06
NEIGHBORHOOD/LOC	2417.00	1.00/	

AREA TYPE	TOTAL GROSS AREA	PCT OF BASE	YEAR	TOT ADJ AREA	SUBAREA MARKET VALUE
BAS	6,740	100		6,740	23,347
CAN	1,080	30		324	1,122
TOTALS	7,820			7,064	24,470

MARKET ADJUSTMENTS

TYPE	MDL	EFF. AREA	TOT ADJ PTS	EFF. BASE RATE	REPL. COST NEW	AYB	EYB	ECON	FNCT	AP	NORM	% COND
8602	06	7,064	57.7500	17.32	122,348	1940	1940	0	0	35	50.00	20.00

2 LUMB YD BD 0% - 0 Heated Area: 6740 HX Base Yr

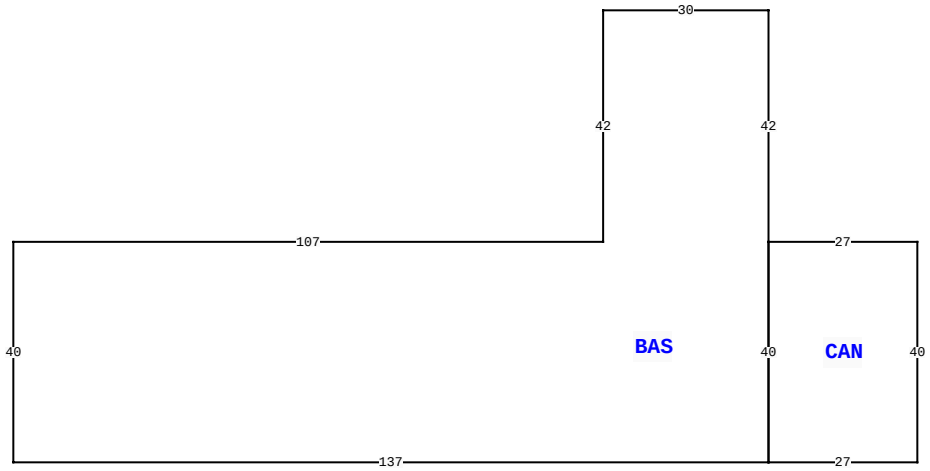

1135 SE STATE ROAD 100 , LAKE CITY

BLD DATE		LGL DATE	
XF DATE		LAND DATE	
INC DATE		AG DATE	

COLUMBIA COUNTY PROPERTY

PAGE 2 of 4 2

VALUATION SUMMARY

VALUATION BY	STANDARD
Tax Group: 2	Tax Dist:
BUILDING MARKET VALUE	421,368
TOTAL MARKET OB/XF VALUE	134,059
TOTAL LAND VALUE - MARKET	387,100
TOTAL MARKET VALUE	942,527
SOH/AGL Deduction	0
ASSESSED VALUE	942,527
TOTAL EXEMPTION VALUE	0
BASE TAXABLE VALUE	942,527
TOTAL JUST VALUE	942,527
NCON VALUE	0
INCOME VALUE	
PREVIOUS YEAR MKT VALUE	953,379

XFOB:5:1: COMB BARN & POLE SHED
XFOB:4:1: METAL SHED
XFOB:3:1: DRIVES & WALKS
XFOB:2:1: 6000 SF X 1.30 X .50-CONCRETE

PERMIT NUM	DESCRIPTION	AMT	ISSUED

SALES DATA

OFF RECORD Number	DATE	TYPE INST	Q U /	V I /	RSN CD	SALE PRICE

BUILDING NOTES

BUILDING DIMENSIONS

CAN= W27 BAS= N42 W30 S42 W107S40 E137 N40$ S40 E27 N40$.

EXTRA FEATURES

LN	OB/XF CODE	DESCRIPTION	BLD	CAP	L	W	UNITS	UT	Adj R	ADJ UNIT PRICE	ORIG COND	YEAR ON	YEAR ACTUAL	Q	% COND	OB/XF MKT VALUE	NOTES
11	0030	BARN,MT	0	0	0	0	1.00	UT	900.00	900.00	100	0	0	3	100	900	
12	0010	BARN,BLK	0	0	0	0	1.00	UT	3,960.00	3,960.00	100	0	0	3	100	3,960	
13	0020	BARN,FR	0	0	32	127	1.00	UT	1,800.00	1,800.00	100	0	0	3	100	1,800	
14	0020	BARN,FR	0	0	60	125	1.00	UT	18,000.00	18,000.00	90	0	0	3	90	16,200	
15	0020	BARN,FR	0	0	30	58	1.00	UT	2,349.00	2,349.00	100	0	0	3	100	2,349	
16	0020	BARN,FR	0	0	24	60	1.00	UT	3,888.00	3,888.00	100	0	0	3	100	3,888	
17	0020	BARN,FR	0	0	40	123	2.00	UT	6,642.00	6,642.00	90	0	0	3	90	11,956	
18	0294	SHED WOOD/	0	0	0	0	1.00	UT	8,217.00	8,217.00	100	0	0	3	100	8,217	
19	0296	SHED METAL	0	0	0	0	1.00	UT	2,430.00	2,430.00	100	0	0	3	100	2,430	
20	0292	SCALES	0	0	35	37	1.00	UT	0.00	0.00	100	0	0	3	100	10,000	

TOTAL OB/XF 61,700

LAND DESCRIPTION

LN	USE CODE	CLS	LAND USE DESCRIPTION	CAP	RD	LOC ZONE	FRONT	DEPTH	TOT LND UTS	UNIT TYPE	DT	DPTH FACT	% COND	TOT ADJ	UNIT PRICE	ADJ UNIT PRICE	LAND VALUE	OTHER ADJUSTMENTS AND NOTES	YEAR	DENSITY	DECL	FRZ	YR	CONSRV

REVIEW DATE 01/15/2019 BY ME Total Acres: 39.50 Total Land Value: 387,100 Market: 0 Agricultural: 0 Common: 387,100 PRINTED 11/17/2025 BY SYS

46.90 AC SEC 2-4S-17 AS PER
LEASE FROM CITY OF LAKE CITY
TO DANIELS LUMBER IN ORB 762-

CITY OF LAKE CITY (LEASE PROP)
GREAT SOUTH TIMBER & LUMBER CO, P O BOX 2249
LAKE CITY, FL 32056

2026

02-4S-17-07483-007

COLUMBIA COUNTY PROPERTY

BUILDING CHARACTERISTICS

ELEMENT	CD	CONSTRUCTION
Exterior Wall	25	MOD METAL 100
Roof Structur	10	STEEL FRME 100
Roof Cover	12	MODULAR MT 100
Interior Wall	07	NONE 100
Interior Floo	03	CONC FINSH 100
Ceiling	04	NONE 100
Air Condition	01	NONE 100
Heating Type	01	NONE 100
Plumbing		0 100
Frame	05	STEEL 100
Story Height		20 100
RMS		1 100
Stories	1.	1. 100
Units		0 100
Condition Adj	02	02 100
Quality	01	01

DOR CODE	8901	MUNICIPAL IMP- NON- EX	
MAP NUM		MKT AREA	06
NEIGHBORHOOD/LOC	2417.00	1.00/	

AREA TYPE	TOTAL GROSS AREA	PCT OF BASE	YEAR	TOT ADJ AREA	SUBAREA MARKET VALUE
BAS	22,500	100		22,500	174,636
CAN	4,504	30		1,351	10,486
TOTALS	27,004			23,851	185,122

MARKET ADJUSTMENTS

TYPE	MDL	EFF. AREA	TOT ADJ PTS	EFF. BASE RATE	REPL. COST NEW	AYB	EYB	ECON	FNCT	AP	NORM	% COND
8602	06	23,851	61.5921	18.48	440,766	2005	2005	0	0	35	23.00	42.00

3 LUMB YD BD 0% - 0 Heated Area: 22500 HX Base Yr

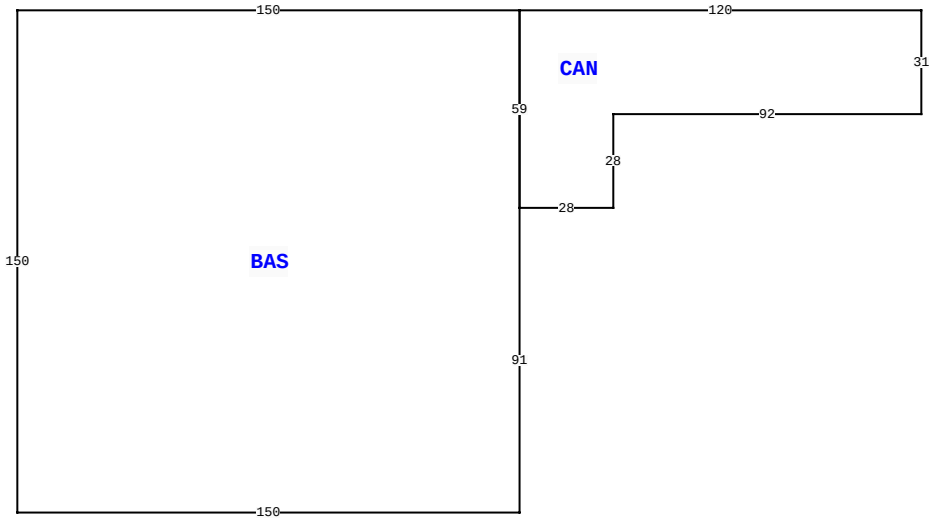

1135 SE STATE ROAD 100 , LAKE CITY

BLD DATE		LGL DATE	
XF DATE		LAND DATE	
INC DATE		AG DATE	

VALUATION SUMMARY

VALUATION BY	STANDARD
Tax Group: 2	Tax Dist:
BUILDING MARKET VALUE	421,368
TOTAL MARKET OB/XF VALUE	134,059
TOTAL LAND VALUE - MARKET	387,100
TOTAL MARKET VALUE	942,527
SOH/AGL Deduction	0
ASSESSED VALUE	942,527
TOTAL EXEMPTION VALUE	0
BASE TAXABLE VALUE	942,527
TOTAL JUST VALUE	942,527
NCON VALUE	0
INCOME VALUE	
PREVIOUS YEAR MKT VALUE	953,379

XFOB:19:1: OLD HOUSE,WAS OFFICE NOW STORAGE
XFOB:18:1: BLDG #17-WD FRAME-AREA 748 WITH POLE SH
XFOB:17:1: #15 & #16 POLE SHEDS-DIRT FLOOR
XFOB:16:1: (BLDG #14)

PERMIT NUM	DESCRIPTION	AMT	ISSUED

SALES DATA

OFF RECORD Number	DATE	TYPE INST	Q U /	V I /	RSN CD	SALE PRICE

BUILDING NOTES

BUILDING DIMENSIONS

BAS= W150 S150 E150 N91 CAN= E28 N28 E92 N31 W120 S59$ N59$.

EXTRA FEATURES

LN	OB/XF CODE	DESCRIPTION	BLD	CAP	L	W	UNITS	UT	Adj R	ADJ UNIT PRICE	ORIG COND	YEAR ON	YEAR ACTUAL	Q	% COND	OB/XF MKT VALUE	NOTES
21	0030	BARN,MT	0	0	35	37	1,295.00	UT	11.50	11.50	90	1995	1995	3	90	13,403	
22	0296	SHED METAL	0	0	10	12	120.00	UT	9.00	9.00	100	2018	2018	3	100	1,080	
23	0166	CONC,PAVMT	0	0	20	50	1,000.00	UT	2.00	2.00	100	2018	2018	3	100	2,000	
24	0030	BARN,MT	0	0	12	30	360.00	UT	30.00	30.00	100	2018	2018	3	100	10,800	
25	0166	CONC,PAVMT	0	0	0	0	1.00	UT	0.00	0.00	100	2018	2018	3	100	4,000	
26	0040	BARN,POLE	0	0	15	24	360.00	UT	10.00	10.00	100	2018	2018	3	100	3,600	

LAND DESCRIPTION

TOTAL OB/XF 34,883

LN	USE CODE	CLS	LAND USE DESCRIPTION	CAP	RD	LOC ZONE	FRONT	DEPTH	TOT LND UTS	UNIT TYPE	DT	DPTH FACT	% COND	TOT ADJ	UNIT PRICE	ADJ UNIT PRICE	LAND VALUE	OTHER ADJUSTMENTS AND NOTES	YEAR	DENSITY	DECL	FRZ	YR	CONSRV

REVIEW DATE 01/15/2019 BY ME Total Acres: 39.50 Total Land Value: 387,100 Market: 0 Agricultural: 0 Common: 387,100 PRINTED 11/17/2025 BY SYS

46.90 AC SEC 2-4S-17 AS PER
LEASE FROM CITY OF LAKE CITY
TO DANIELS LUMBER IN ORB 762-

CITY OF LAKE CITY (LEASE PROP)
GREAT SOUTH TIMBER & LUMBER CO, P O BOX 2249
LAKE CITY, FL 32056

2026

02-4S-17-07483-007

BUILDING CHARACTERISTICS

ELEMENT	CD	CONSTRUCTION
Exterior Wall	27	PREFIN MTL 100
Roof Structur	10	STEEL FRME 100
Roof Cover	14	PREFIN MT 100
Interior Wall	01	MINIMUM 100
Interior Floo	03	CONC FINSH 100
Ceiling	03	PART.FIN. 100
Air Condition	01	NONE 100
Heating Type	01	NONE 100
Plumbing		0 100
Frame	05	STEEL 100
Story Height		20 100
RMS		2 100
Stories	1.	1. 100
Units		0 100
Quality	05	05

DOR CODE	8901	MUNICIPAL IMP- NON- EX	
MAP NUM		MKT AREA	06
NEIGHBORHOOD/LOC	2417.00	1.00/	

AREA TYPE	TOTAL GROSS AREA	PCT OF BASE	YEAR	TOT ADJ AREA	SUBAREA MARKET VALUE
AOF	600	150		900	48,496
BAS	2,400	100		2,400	129,322
CAN	250	30		75	4,041
CAN	720	30		216	11,639
TOTALS	3,970			3,591	193,498

MARKET ADJUSTMENTS

TYPE	MDL	EFF. AREA	TOT ADJ PTS	EFF. BASE RATE	REPL. COST NEW	AYB	EYB	ECON	FNCT		NORM	% COND
8700	06	3,591	149.2504	56.72	203,682	2018	2018	0	0	0	5.00	95.00

4 PREF M B A 0% - 0 Heated Area: 3000 HX Base Yr

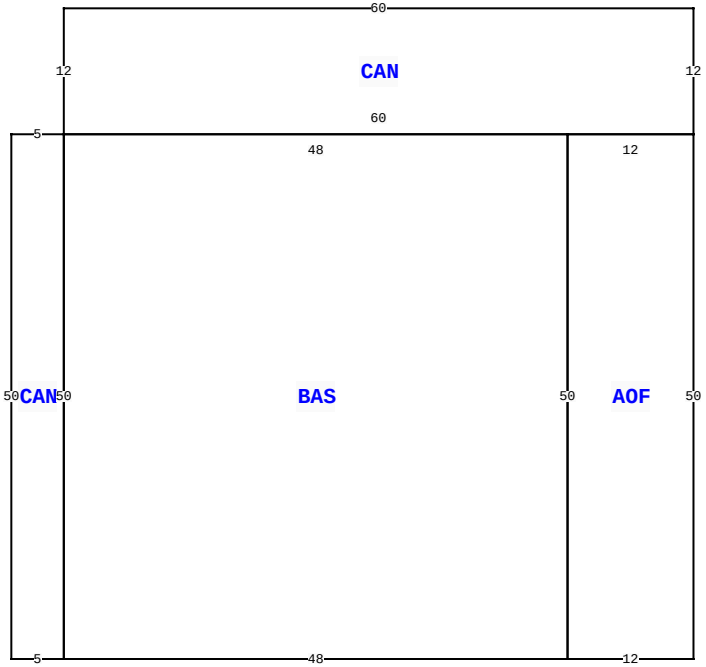

1135 SE STATE ROAD 100 , LAKE CITY

BLD DATE		LGL DATE	
XF DATE		LAND DATE	
INC DATE		AG DATE	

COLUMBIA COUNTY PROPERTY

PAGE 4 of 4 2

VALUATION SUMMARY

VALUATION BY	STANDARD
Tax Group: 2	Tax Dist:
BUILDING MARKET VALUE	421,368
TOTAL MARKET OB/XF VALUE	134,059
TOTAL LAND VALUE - MARKET	387,100
TOTAL MARKET VALUE	942,527
SOH/AGL Deduction	0
ASSESSED VALUE	942,527
TOTAL EXEMPTION VALUE	0
BASE TAXABLE VALUE	942,527
TOTAL JUST VALUE	942,527
NCON VALUE	0
INCOME VALUE	
PREVIOUS YEAR MKT VALUE	953,379

XFOB:15:1: (BLDG #13)
XFOB:14:1: (BLDG #12-STEEL TRUSS,CONC FLOOR, 20' H
XFOB:13:1: (BLDG #11)
XFOB:12:1: POLE SHED (9 & 10)

PERMIT NUM	DESCRIPTION	AMT	ISSUED

SALES DATA

OFF RECORD Number	DATE	TYPE INST	Q U /	V I /	RSN CD	SALE PRICE

BUILDING NOTES

BUILDING DIMENSIONS

CAN= N12 W60 S12 E60$ AOF= W12 BAS= W48 CAN= W5 S50 E5 N50$ S50 E48 N50$ S50 E12 N50$.

EXTRA FEATURES

L N	OB/XF CODE	DESCRIPTION	BLD	CAP	L	W	UNITS	UT	Adj R	ADJ UNIT PRICE	ORIG COND	YEAR ON	YEAR ACTUAL	Q	% COND	OB/XF MKT VALUE	NOTES

LAND DESCRIPTION

TOTAL OB/XF 0

L N	USE CODE	CLS	LAND USE DESCRIPTION	CAP	R D	LOC ZONE	FRONT	DEPTH	TOT LND UTS	UNIT TYPE	D T	DPTH FACT	% COND	TOT ADJ	UNIT PRICE	ADJ UNIT PRICE	LAND VALUE	OTHER ADJUSTMENTS AND NOTES	YEAR	DENSITY	DECL	FRZ	YR	CONSRV

REVIEW DATE 01/15/2019 BY ME Total Acres: 39.50 Total Land Value: 387,100 Market: 0 Agricultural: 0 Common: 387,100 PRINTED 11/17/2025 BY SYS