LOT 1 MAYFAIR S/D UNIT 2, ALSO
BEG NW COR LOT 14 MAYFAIR
S/D, RUN N 20 FT TO SW COR

ANDERSON JOSHUA
312 SW PILOTS WAY
LAKE CITY, FL 32024

2026

02-4S-16-02911-201

COLUMBIA COUNTY PROPERTY

BUILDING CHARACTERISTICS

ELEMENT	CD	CONSTRUCTION
Exterior Wall	16	WD FR STUC 100
Roof Structur	03	GABLE/HIP 100
Roof Cover	03	COMP SHNGL 100
Interior Wall	05	DRYWALL 100
Interior Floo	14	CARPET 100
Air Condition	03	CENTRAL 100
Heating Type	04	AIR DUCTED 100
Bedrooms		3 100
Bathrooms		2 100
Frame	01	NONE 100
Stories	1.	1. 100
Architectual	05	CONV 100
Units		0 100
Condition Adj	03	03 100
Kitchen Adjus	01	01 100
Quality	06	06
DOR CODE	0100	SINGLE FAMILY
MAP NUM		MKT AREA 06
NEIGHBORHOOD/LOC	11416.030	1.00/

AREA TYPE	TOTAL GROSS AREA	PCT OF BASE	YEAR	TOT ADJ AREA	SUBAREA MARKET VALUE
BAS	1,635	100		1,635	137,339
FGR	528	55		290	24,360
FOP	45	30		14	1,176
FSP	169	40		68	5,712
PTO	150	5		8	672
TOTALS	2,527			2,015	169,259

MARKET ADJUSTMENTS

TYPE	MDL	EFF. AREA	TOT ADJ PTS	EFF. BASE RATE	REPL. COST NEW	AYB	EYB	ECON	FNCT		NORM	% COND
0100	01	2,015	115.3845	129.23	260,398	1994	1994	0	0	0	35.00	65.00

1 SINGLE FAM 100% - 2005 Heated Area: 1635 HX Base Yr 2005

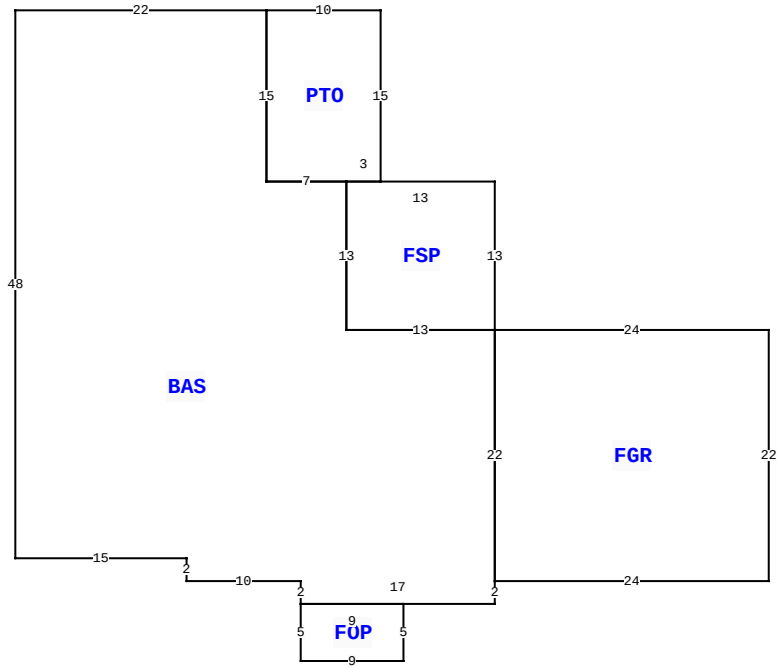

312 SW PILOTS WAY, LAKE CITY

BLD DATE		LGL DATE	
XF DATE		LAND DATE	04/03/2025 MLU
INC DATE		AG DATE	

VALUATION SUMMARY

VALUATION BY		STANDARD
Tax Group: 2	Tax Dist:	
BUILDING MARKET VALUE		169,259
TOTAL MARKET OB/XF VALUE		4,645
TOTAL LAND VALUE - MARKET		41,562
TOTAL MARKET VALUE		215,466
SOH/AGL Deduction		82,564
ASSESSED VALUE		132,902
TOTAL EXEMPTION VALUE	HX HB	50,722
BASE TAXABLE VALUE		82,180
TOTAL JUST VALUE		215,466
NCON VALUE		0
INCOME VALUE		
PREVIOUS YEAR MKT VALUE		215,466

PERMIT NUM	DESCRIPTION	AMT	ISSUED
37371	MAINT/ALTR	75	10/26/2018
8548	SFR	51,000	06/30/1994

SALES DATA

OFF RECORD Number	DATE	TYPE INST	Q U	V I	RSN CD	SALE PRICE
1029/0697	10/22/2004	WD	Q	I		119,500
GRANTOR: ODIS GORDY & DORIS E						
GRANTEE: JOSHUA ANDERSON						
0805/1585	5/19/1995	WD	Q	I		93,300
GRANTOR: KENNETH TYLER & JANIC						
GRANTEE: ODIS C GORDY & DORI						

BUILDING NOTES

BUILDING DIMENSIONS

BAS= W22 S48 E15 S2 E10 S2 FOP= S5 E9 N5 W9$ E17 N2 FGR= E24 N22 W24 S22$ N22 FSP= N13 W13 S13 E13$ W13 N13PTO= E3 N15 W10 S15 E7$ W7 N15$.

EXTRA FEATURES

LN	OB/XF CODE	DESCRIPTION	BLD	CAP	L	W	UNITS	UT	Adj R	ADJ UNIT PRICE	ORIG COND	YEAR ON	YEAR ACTUAL	Q	% COND	OB/XF MKT VALUE	NOTES
1	0166	CONC,PAVMT	0	100	0	0	1,873.00	UT	1.50	1.50	50	0	0	3	50	1,405	
2	0060	CARPORT F	0	100	24	30	720.00	UT	4.50	4.50	100	2009	2009	3	100	3,240	

LAND DESCRIPTION

TOTAL OB/XF 4,645

LN	USE CODE	CLS	LAND USE DESCRIPTION	CAP	RD	LOC ZONE	FRONT	DEPTH	TOT LND UTS	UNIT TYPE	DT	DPTH FACT	% COND	TOT ADJ	UNIT PRICE	ADJ UNIT PRICE	LAND VALUE	OTHER ADJUSTMENTS AND NOTES	YEAR	DENSITY	DECL	FRZ	YR	CONSRV
1	0100	C	SFR	100		RSF-1	0.00	0.00	1.00	LT		1.00	1.00	1.19	35,000.00	41,562.50	41,562							

REVIEW DATE 08/25/2023 BY KS Total Acres: 1.17 Total Land Value: 41,562 Market: 0 Agricultural: 0 Common: 41,562 PRINTED 11/18/2025 BY SYS