COMM AT A PT OF INTERS OF S
LINE OF NE1/4 OF NW1/4 & W
R/W I-75 BLVD, RUN NW ALONG

SOUTHLAND LOG HOMES REALTY LLC
P O BOX 1668
IRMO, SC 29063

2026

02-4S-16-02714-199

COLUMBIA COUNTY PROPERTY

BUILDING CHARACTERISTICS

ELEMENT	CD	CONSTRUCTION
Exterior Wall	51	LOG 100
Roof Structur	03	GABLE/HIP 100
Roof Cover	09	CEDAR SHAK 100
Interior Wall	01	MINIMUM 50
Interior Wall	05	DRYWALL 50
Interior Floo	12	HARDWOOD 100
Air Condition	03	CENTRAL 100
Heating Type	04	AIR DUCTED 100
Bedrooms		3 100
Bathrooms		2 100
Frame	01	NONE 100
Stories	1.5	1.5 100
Architectual	05	CONV 100
Units		0 100
Condition Adj	03	03 100
Kitchen Adjus	01	01 100
Quality	05	05
DOR CODE	0100	SINGLE FAMILY
MAP NUM		MKT AREA 06
NEIGHBORHOOD/LOC	2416.00	1.00/

AREA TYPE	TOTAL GROSS AREA	PCT OF BASE	YEAR	TOT ADJ AREA	SUBAREA MARKET VALUE
BAS	1,264	100		1,264	112,773
FHS	668	60		401	35,777
FOP	440	30		132	11,777
FOP	584	30		175	15,614
PTO	40	5		2	178
TOTALS	2,996			1,974	176,118

MARKET ADJUSTMENTS

TYPE	MDL	EFF. AREA	TOT ADJ PTS	EFF. BASE RATE	REPL. COST NEW	AYB	EYB	ECON	FNCT		NORM	% COND
0100	01	1,974	120.6922	135.18	266,845	1991	1991	0	0	0	34.00	66.00

1 SINGLE FAM 0% - 0 Heated Area: 1932 HX Base Yr

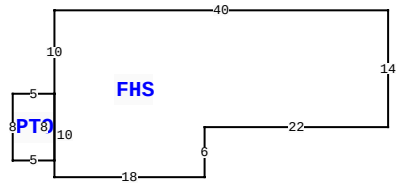

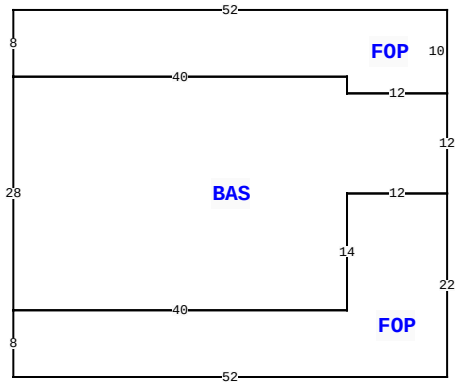

638 SW FLORIDA GATEWAY DR, LAKE CITY

BLD DATE		LGL DATE	
XF DATE		LAND DATE	04/09/2024 MLU
INC DATE		AG DATE	

VALUATION SUMMARY

VALUATION BY	STANDARD
Tax Group: 1	Tax Dist:
BUILDING MARKET VALUE	176,118
TOTAL MARKET OB/XF VALUE	2,750
TOTAL LAND VALUE - MARKET	81,616
TOTAL MARKET VALUE	260,484
SOH/AGL Deduction	0
ASSESSED VALUE	260,484
TOTAL EXEMPTION VALUE	0
BASE TAXABLE VALUE	260,484
TOTAL JUST VALUE	260,484
NCON VALUE	0
INCOME VALUE	
PREVIOUS YEAR MKT VALUE	263,152

PERMIT NUM	DESCRIPTION	AMT	ISSUED

SALES DATA

OFF RECORD Number	DATE	TYPE INST	Q / U	V / I	RSN CD	SALE PRICE
1269/1432	2/12/2014	WD	Q	I	01	312,500
GRANTOR: HOWELL LOGGING INC						
GRANTEE: SOUTHLAND LOG HOMES						
1250/1819	3/07/2013	WD	U	I	12	225,000
GRANTOR: FIRST FEDERAL BANK OF						
GRANTEE: HOWELL LOGGING INC						

BUILDING NOTES

BUILDING DIMENSIONS

FOP= N10 W52 S8 E40 S2 E12$ BAS= W12 N2 W40 S28 FOP= S8E52 N22 W12 S14 W40$ E40 N14 E12 N12$ PTR=N30 FHS= N14 W40 S10 PTO= W5 S8 E5 N8$ S10E18 N6 E22 $ S30$.

EXTRA FEATURES

LN	OB/XF CODE	DESCRIPTION	BLD	CAP	L	W	UNITS	UT	Adj R	ADJ UNIT PRICE	ORIG COND	YEAR ON	YEAR ACTUAL	Q	% COND	OB/XF MKT VALUE	NOTES
1	0170	FPLC 2STRY	0	0	0	0	1.00	UT	2,750.00	2,750.00	100	0	0	3	100	2,750	

LAND DESCRIPTION

TOTAL OB/XF 2,750

LN	USE CODE	CLS	LAND USE DESCRIPTION	CAP	RD	LOC ZONE	FRONT	DEPTH	TOT LND UTS	UNIT TYPE	DT	DPTH FACT	% COND	TOT ADJ	UNIT PRICE	ADJ UNIT PRICE	LAND VALUE	OTHER ADJUSTMENTS AND NOTES	YEAR	DENSITY	DECL	FRZ	YR	CONSRV
1	0100	C	SFR	0		CG	100.00	200.00	20,404.00	SF		1.00	1.00	0.40	10.00	4.00	81,616							

REVIEW DATE 08/25/2023 BY JB Total Acres: 0.47 Total Land Value: 81,616 Market: 0 Agricultural: 0 Common: 81,616 PRINTED 11/07/2025 BY SYS