AKA LOT A-8 WILSON SPRINGS COMMU
COMM AT NE COR OF SEC, RUN W 33
WILSON SPRINGS RD S ALONG R/W 19

WHITE SUSAN
3385 SW WILSON SPRINGS RD
FORT WHITE, FL 32038

2026

01-7S-15-01439-622

COLUMBIA COUNTY PROPERTY

BUILDING CHARACTERISTICS

ELEMENT	CD	CONSTRUCTION
Exterior Wall	08	WD OR PLY 100
Roof Structur	03	GABLE/HIP 100
Roof Cover	03	COMP SHNGL 100
Interior Wall	05	DRYWALL 100
Interior Floo	09	PINE WOOD 100
Air Condition	03	CENTRAL 100
Heating Type	04	AIR DUCTED 100
Bedrooms		2 100
Bathrooms		2 100
Frame		N/A 100
Stories	0	0 100
Architectual	05	CONV 100
Units		0 100
Condition Adj	03	03 100
Kitchen Adjus	01	01 100
Quality	03	03
DOR CODE	0100	SINGLE FAMILY
MAP NUM		MKT AREA 02
NEIGHBORHOOD/LOC	6716.0400	1.00/

AREA TYPE	TOTAL GROSS AREA	PCT OF BASE	YEAR	TOT ADJ AREA	SUBAREA MARKET VALUE
BAS	240	100		240	14,945
BAS	312	100		312	19,429
BAS	983	100		983	61,211
UEP	210	60		126	7,846
UOP	50	20		10	623
UST	55	45		25	1,557
UST	180	45		81	5,044
TOTALS	2,030			1,777	110,654

MARKET ADJUSTMENTS

TYPE	MDL	EFF. AREA	TOT ADJ PTS	EFF. BASE RATE	REPL. COST NEW	AYB	EYB	ECON	FNCT		NORM	% COND
0100	01	1,777	85.5360	95.80	170,237	1975	1975	0	0	0	35.00	65.00

1 SINGLE FAM 100% - 2006 Heated Area: 1535 HX Base Yr 2006

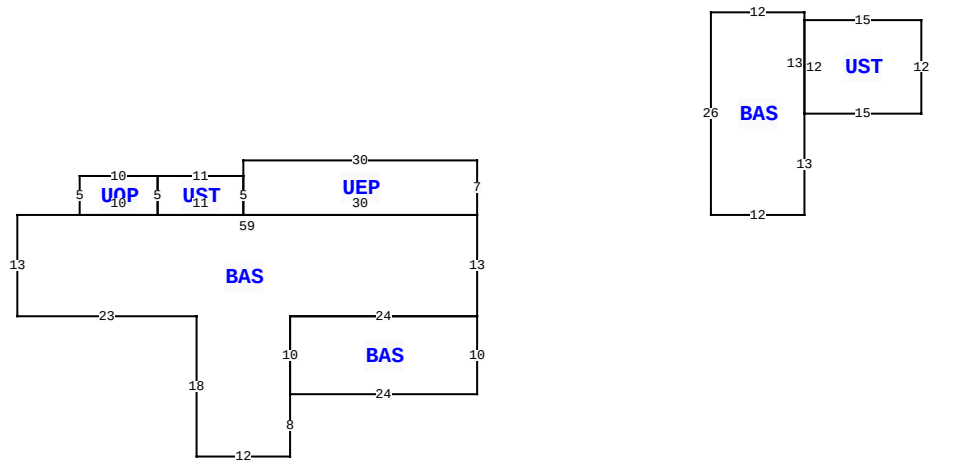

BLD DATE		LGL DATE	
XF DATE		LAND DATE	05/13/2025 MLU
INC DATE		AG DATE	

3385 SW WILSON SPRINGS RD, FORT WHITE

VALUATION SUMMARY

VALUATION BY		STANDARD
Tax Group: 3	Tax Dist:	
BUILDING MARKET VALUE		110,654
TOTAL MARKET OB/XF VALUE		2,100
TOTAL LAND VALUE - MARKET		17,080
TOTAL MARKET VALUE		129,834
SOH/AGL Deduction		52,898
ASSESSED VALUE		76,936
TOTAL EXEMPTION VALUE	HX HB WX	55,722
BASE TAXABLE VALUE		21,214
TOTAL JUST VALUE		129,834
NCON VALUE		0
INCOME VALUE		
PREVIOUS YEAR MKT VALUE		129,834

PERMIT NUM	DESCRIPTION	AMT	ISSUED

SALES DATA

OFF RECORD Number	DATE	TYPE INST	Q / U	V / I	RSN CD	SALE PRICE
1070/2421	12/30/2005	WD	Q	I	03	10,000

GRANTOR: WILSON SPRINGS INC

GRANTEE: WHITE

BUILDING NOTES

BUILDING DIMENSIONS

BAS= W59 S13 E23 S18 E12 N8 BAS= E24 N10 W24 S10 $ N10 E24 N13 $UEP= N7 W30 S2 UST= W11 UOP= W10 S5 E10 N5$ S5 E11 N5$ S5 E30$ PTR= E30 BAS= E12 N13 UST= E15 N12 W15 S12$ N13 W12 S26 $ W30$.

EXTRA FEATURES

LN	OB/XF CODE	DESCRIPTION	BLD	CAP	L	W	UNITS	UT	Adj R	ADJ UNIT PRICE	ORIG COND	YEAR ON	YEAR ACTUAL	Q	% COND	OB/XF MKT VALUE	NOTES
1	0294	SHED WOOD/	0	100	0	0	1.00	UT	0.00	0.00	100	2008	2008	3	100	100	
2	0296	SHED METAL	0	100	0	0	1.00	UT	0.00	0.00	100	2016	2016	3	100	1,200	
3	0296	SHED METAL	0	100	0	0	1.00	UT	0.00	0.00	100	2016	2016	3	100	800	

LAND DESCRIPTION

TOTAL OB/XF 2,100

LN	USE CODE	CLS	LAND USE DESCRIPTION	CAP	RD	LOC ZONE	FRONT	DEPTH	TOT LND UTS	UNIT TYPE	DT	DPTH FACT	% COND	TOT ADJ	UNIT PRICE	ADJ UNIT PRICE	LAND VALUE	OTHER ADJUSTMENTS AND NOTES	YEAR	DENSITY	DECL	FRZ	YR	CONSRV
1	0100	C	SFR	100			0.00	0.00	1.22	AC		1.00	1.00	1.00	14,000.00	14,000.00	17,080							

REVIEW DATE 03/08/2016 BY DF Total Acres: 1.22 Total Land Value: 17,080 Market: 0 Agricultural: 0 Common: 17,080 PRINTED 11/13/2025 BY SYS