LOT 11 ROSE CREEK PLANTATION S/D
898-160, WD 1004-2170,

DISOSWAY DAVID M
116 SW STONERIDGE DR
LAKE CITY, FL 32024

2026

01-5S-16-03406-111

COLUMBIA COUNTY PROPERTY

BUILDING CHARACTERISTICS

ELEMENT	CD	CONSTRUCTION
Exterior Wall	16	WD FR STUC 80
Exterior Wall	12	CEDAR 20
Roof Structur	03	GABLE/HIP 100
Roof Cover	03	COMP SHNGL 100
Interior Wall	05	DRYWALL 100
Interior Floo	11	CLAY TILE 80
Interior Floo	12	HARDWOOD 20
Air Condition	03	CENTRAL 100
Heating Type	04	AIR DUCTED 100
Bedrooms		4 100
Bathrooms		3 100
Frame	02	WOOD FRAME 100
Stories	2.	2. 100
Architectual	05	CONV 100
Units		0 100
Quality	07	07
DOR CODE	0100	SINGLE FAMILY
MAP NUM		MKT AREA 01
NEIGHBORHOOD/LOC	1516.0500	1.00/

AREA TYPE	TOTAL GROSS AREA	PCT OF BASE	YEAR	TOT ADJ AREA	SUBAREA MARKET VALUE
BAS	1,493	100		1,493	181,653
FGR	636	55		350	42,585
FOP	364	30		109	13,262
FUS	1,262	100		1,262	153,546
UST	36	45		16	1,946
TOTALS	3,791			3,230	392,992

MARKET ADJUSTMENTS

TYPE	MDL	EFF. AREA	TOT ADJ PTS	EFF. BASE RATE	REPL. COST NEW	AYB	EYB	ECON	FNCT		NORM	% COND
0100	01	3,230	135.1142	151.33	488,796	2011	2011	0	0	0	19.60	80.40

1 SINGLE FAM 100% - 2012 Heated Area: 2755 HX Base Yr 2012

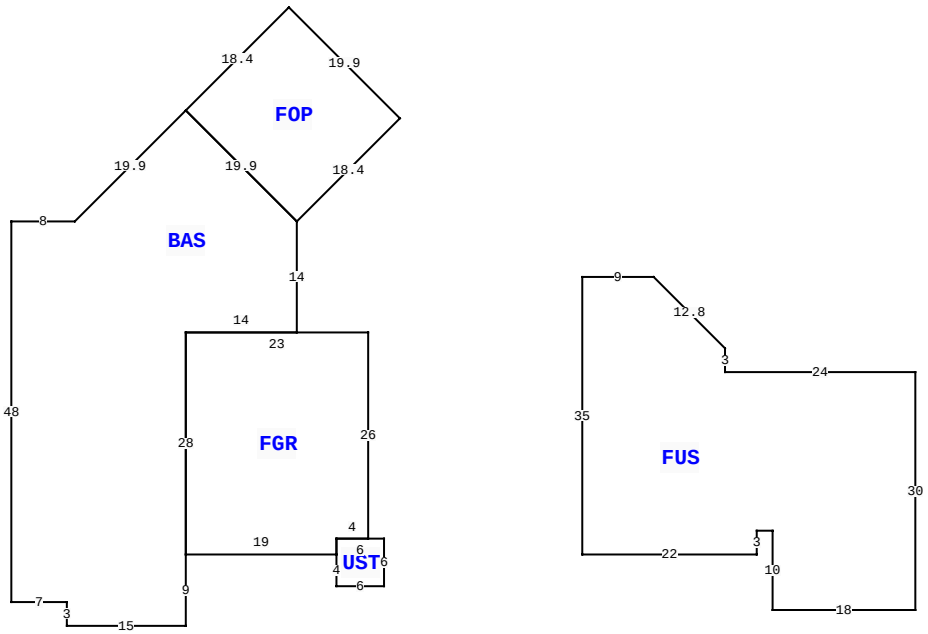

116 SW STONERIDGE DR, LAKE CITY

BLD DATE		LGL DATE	
XF DATE		LAND DATE	04/07/2025 MLU
INC DATE		AG DATE	

VALUATION SUMMARY

VALUATION BY		STANDARD
Tax Group: 3	Tax Dist:	
BUILDING MARKET VALUE		392,992
TOTAL MARKET OB/XF VALUE		6,500
TOTAL LAND VALUE - MARKET		55,000
TOTAL MARKET VALUE		454,492
SOH/AGL Deduction		123,651
ASSESSED VALUE		330,841
TOTAL EXEMPTION VALUE	HX HB	50,722
BASE TAXABLE VALUE		280,119
TOTAL JUST VALUE		454,492
NCON VALUE		0
INCOME VALUE		
PREVIOUS YEAR MKT VALUE		461,335

PERMIT NUM	DESCRIPTION	AMT	ISSUED
28141	SFR	1,031	10/12/2009

SALES DATA

OFF RECORD Number	DATE	TYPE INST	Q U	V I	RSN CD	SALE PRICE
1004/2170	1/14/2004	WD	Q	V		58,000
GRANTOR: CHRUSTOPHER J CURRY						
GRANTEE: DAVID M DOSOSWAY						
0898/0160	3/01/2000	WD	Q	V		49,900
GRANTOR: WESTFIELD GROUP LTD						
GRANTEE: C CURRY						

BUILDING NOTES

BUILDING DIMENSIONS

BAS= N28 E14 N14 FOP= R13 U13 U14 L14 L13 D13 D14 R14 $ L14 U14 L14 D14 W8 S48 E7 S3 E15 N9 FGR= E19 UST= S4 E6 N6 W6 S2$ N2 E4 N26 W23 S28$ PTR= E50 FUS= E22 N3 E2 S10 E18 N30 W24 N3 U9 L9 W9 S35$ W50$.

EXTRA FEATURES

LN	OB/XF CODE	DESCRIPTION	BLD	CAP	L	W	UNITS	UT	Adj R	ADJ UNIT PRICE	ORIG COND	YEAR ON	YEAR ACTUAL	Q	% COND	OB/XF MKT VALUE	NOTES
1	0166	CONC,PAVMT	0	100	0	0	1.00	UT	0.00	0.00	100	2019	2019	3	100	6,500	

LAND DESCRIPTION

TOTAL OB/XF 6,500

LN	USE CODE	CLS	LAND USE DESCRIPTION	CAP	RD	LOC ZONE	FRONT	DEPTH	TOT LND UTS	UNIT TYPE	DT	DPTH FACT	% COND	TOT ADJ	UNIT PRICE	ADJ UNIT PRICE	LAND VALUE	OTHER ADJUSTMENTS AND NOTES	YEAR	DENSITY	DECL	FRZ	YR	CONSRV
1	0100	C	SFR	100		A-3	0.00	0.00	5.00	AC		1.00	1.00	1.00	11,000.00	11,000.00	55,000							

REVIEW DATE 07/19/2019 BY KR Total Acres: 5.00 Total Land Value: 55,000 Market: 0 Agricultural: 0 Common: 55,000 PRINTED 10/01/2025 BY SYS