LOT 2 SOUTHWOOD VILLAGE S/D.
658-65, 901-164, 914-776, 933-5,

CORREA YOLANDA G
P O BOX 1019
FORT WHITE, FL 32038

2026

01-5S-16-03399-102

COLUMBIA COUNTY PROPERTY

BUILDING CHARACTERISTICS

ELEMENT	CD	CONSTRUCTION
Exterior Wall	08	WD OR PLY 70
Exterior Wall	16	WD FR STUC 30
Roof Structur	08	IRREGULAR 100
Roof Cover	03	COMP SHNGL 100
Interior Wall	05	DRYWALL 100
Interior Floo	12	HARDWOOD 80
Interior Floo	15	HARDTILE 20
Air Condition	03	CENTRAL 100
Heating Type	04	AIR DUCTED 100
Bedrooms		3 100
Bathrooms		2.5 100
Frame	01	NONE 100
Stories	1.5	1.5 100
Architectual	05	CONV 100
Units		0 100
Condition Adj	03	03 100
Kitchen Adjus	01	01 100
Quality	07	07
DOR CODE	0100	SINGLE FAMILY
MAP NUM		MKT AREA 01
NEIGHBORHOOD/LOC	1516.0100	1.00/

AREA TYPE	TOTAL GROSS AREA	PCT OF BASE	YEAR	TOT ADJ AREA	SUBAREA MARKET VALUE
BAS	1,036	100		1,036	105,897
BAS	1,610	100		1,610	164,569
FOP	248	30		74	7,564
PTO	300	5		15	1,533
TOTALS	3,194			2,735	279,562

MARKET ADJUSTMENTS

TYPE	MDL	EFF. AREA	TOT ADJ PTS	EFF. BASE RATE	REPL. COST NEW	AYB	EYB	ECON	FNCT		NORM	% COND
0100	01	2,735	124.1694	139.07	380,356	1992	2005	0	0	0	26.50	73.50

1 SINGLE FAM 100% - 2021 Heated Area: 2646 HX Base Yr 2021

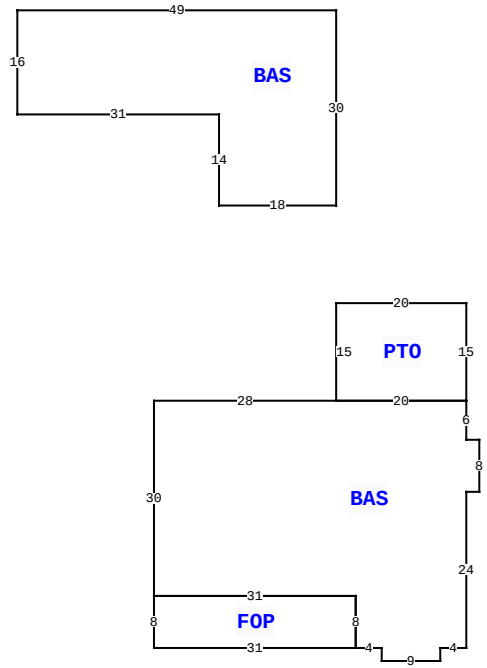

155 SW HICKOK GLN, LAKE CITY

BLD DATE		LGL DATE	
XF DATE		LAND DATE	04/08/2025 MLU
INC DATE		AG DATE	

VALUATION SUMMARY

VALUATION BY		STANDARD
Tax Group: 3	Tax Dist:	
BUILDING MARKET VALUE		279,562
TOTAL MARKET OB/XF VALUE		4,983
TOTAL LAND VALUE - MARKET		26,000
TOTAL MARKET VALUE		310,545
SOH/AGL Deduction		56,091
ASSESSED VALUE		254,454
TOTAL EXEMPTION VALUE	HX HB	50,722
BASE TAXABLE VALUE		203,732
TOTAL JUST VALUE		310,545
NCON VALUE		0
INCOME VALUE		
PREVIOUS YEAR MKT VALUE		315,565

LAND:1:1: 0.56 AC.

PERMIT NUM	DESCRIPTION	AMT	ISSUED
000053011	Roof Replacement	18,739	05/05/2025

SALES DATA

OFF RECORD Number	DATE	TYPE INST	Q / U	V / I	RSN CD	SALE PRICE
1407/1904	3/10/2020	WD	Q	I	01	275,000
GRANTOR: SCOTT A & NICHOLE NIC						
GRANTEE: YOLANDA G CORREA						
1311/2651	3/24/2016	WD	Q	I	01	142,800
GRANTOR: MARK A MAGSTADT						
GRANTEE: SCOTT A NICKELSON						

BUILDING NOTES

BUILDING DIMENSIONS

BAS= W28 S30 FOP= S8 E31 N8W31$ E31 S8 E4 S2 E9 N2 E4 N24E2 N8 W2 N6 PTO= N15 W20 S15 E20$ W20$ PTR=N30 BAS= N30 W49 S16 E31 S14 E18 $ S30$.

EXTRA FEATURES

LN	OB/XF CODE	DESCRIPTION	BLD	CAP	L	W	UNITS	UT	Adj R	ADJ UNIT PRICE	ORIG COND	YEAR ON	YEAR ACTUAL	Q	% COND	OB/XF MKT VALUE	NOTES
1	0166	CONC,PAVMT	0	100	12	93	2,252.00	UT	2.00	2.00	80	1993	1993	3	80	3,603	
2	0294	SHED WOOD/	0	100	6	8	48.00	UT	7.50	7.50	100	1993	1993	3	100	360	
3	0169	FENCE/WOOD	0	100	0	0	272.00	UT	7.50	7.50	50	1993	1993	3	50	1,020	

LAND DESCRIPTION

TOTAL OB/XF 4,983

LN	USE CODE	CLS	LAND USE DESCRIPTION	CAP	RD	LOC ZONE	FRONT	DEPTH	TOT LND UTS	UNIT TYPE	DT	DPTH FACT	% COND	TOT ADJ	UNIT PRICE	ADJ UNIT PRICE	LAND VALUE	OTHER ADJUSTMENTS AND NOTES	YEAR	DENSITY	DECL	FRZ	YR	CONSRV
1	0100	C	SFR	100		RSF-2	0.00	185.00	1.00	LT		1.00	1.00	1.00	26,000.00	26,000.00	26,000							

REVIEW DATE 05/19/2025 BY chuck Total Acres: 0.55 Total Land Value: 26,000 Market: 0 Agricultural: 0 Common: 26,000 PRINTED 11/18/2025 BY SYS