PART OF LOT 4 COVE AT ROSE CREEK. DESC AS FOLLOWS: BEGIN AT THE NW COR OF SAID LOT, RUN

PHINNEY JOEL
331 SW EMORYWOOD GLN
LAKE CITY, FL 32024

2026

01-5S-16-03397-304

COLUMBIA COUNTY PROPERTY

BUILDING CHARACTERISTICS

ELEMENT	CD	CONSTRUCTION
Exterior Wall	32	HARDIE BRD 100
Roof Structur	08	IRREGULAR 100
Roof Cover	03	COMP SHNGL 100
Interior Wall	05	DRYWALL 100
Interior Floo	12	HARDWOOD 80
Interior Floo	15	HARDTILE 20
Air Condition	03	CENTRAL 100
Heating Type	04	AIR DUCTED 100
Bedrooms		4 100
Bathrooms		3 100
Frame	02	WOOD FRAME 100
Stories	1.5	1.5 100
Architectual	05	CONV 100
Units		0 100
Quality	07	07

DOR CODE 0100 SINGLE FAMILY

MAP NUM | MKT AREA 01

NEIGHBORHOOD/LOC 1516.00 1.00/

AREA TYPE	TOTAL GROSS AREA	PCT OF BASE	YEAR	TOT ADJ AREA	SUBAREA MARKET VALUE
BAS	1,941	100		1,941	247,550
FGR	598	55		329	41,960
FOP	36	30		11	1,403
FOP	420	30		126	16,070
UDG	1,200	55		660	84,175
TOTALS	4,195			3,067	391,157

MARKET ADJUSTMENTS

TYPE	MDL	EFF. AREA	TOT ADJ PTS	EFF. BASE RATE	REPL. COST NEW	AYB	EYB	ECON	FNCT		NORM	% COND
0100	01	3,067	135.5624	151.83	465,663	2009	2009	0	0	0	16.00	84.00

1 SINGLE FAM 100% - 2019 Heated Area: 1941 HX Base Yr 2019

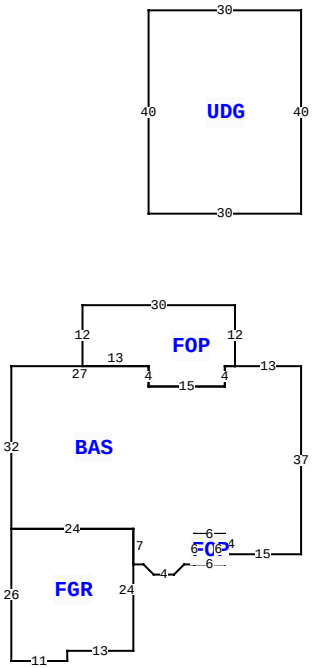

331 SW EMORYWOOD GLN, LAKE CITY

BLD DATE		LGL DATE	
XF DATE		LAND DATE	04/07/2025 MLU
INC DATE		AG DATE	

VALUATION SUMMARY

VALUATION BY		STANDARD
Tax Group: 3	Tax Dist:	
BUILDING MARKET VALUE		391,157
TOTAL MARKET OB/XF VALUE		16,648
TOTAL LAND VALUE - MARKET		29,880
TOTAL MARKET VALUE		437,685
SOH/AGL Deduction		112,980
ASSESSED VALUE		324,705
TOTAL EXEMPTION VALUE	HX HB	50,722
BASE TAXABLE VALUE		273,983
TOTAL JUST VALUE		437,685
NCON VALUE		0
INCOME VALUE		
PREVIOUS YEAR MKT VALUE		442,342

PERMIT NUM	DESCRIPTION	AMT	ISSUED
27691	STORAGE	62	03/13/2009
27681	SFR	1,006	03/11/2009

SALES DATA

OFF RECORD Number	DATE	TYPE INST	Q U	V I	RSN CD	SALE PRICE
1350/1592	12/21/2017	WD	U	I	30	302,000
GRANTOR: PAUL PHINNEY & EMILY						
GRANTEE: JOEL PHINNEY						
1167/0708	2/09/2009	WD	U	V	11	100
GRANTOR: PAUL PHINNEY						
GRANTEE: PAUL PHINNEY & EMIL						

BUILDING NOTES

BUILDING DIMENSIONS

BAS= W13 FOP= N12 W30 S12 E13 S4 E15 N4 E2$ W2 S4 W15 N4 W27 S32 FGR= S26 E11 N2 E13 N24 W24$ E24 S7 E2 R2 D2 E4 U2 R2 E2 FOP= E6 N6 W6 S6$ N6 E6 S4 E15 N37$ PTR= N30 UDG= N40 W30 S40 E30$ S30$.

EXTRA FEATURES

LN	OB/XF CODE	DESCRIPTION	BLD	CAP	L	W	UNITS	UT	Adj R	ADJ UNIT PRICE	ORIG COND	YEAR ON	YEAR ACTUAL	Q	% COND	OB/XF MKT VALUE	NOTES
1	0180	FPLC 1STRY	0	100	0	0	2.00	UT	2,000.00	2,000.00	100	2009	2009	3	100	4,000	
2	0166	CONC,PAVMT	0	100	0	0	2,890.00	UT	2.25	2.25	100	2009	2009	3	100	6,503	
3	0166	CONC,PAVMT	0	100	0	0	251.00	UT	2.25	2.25	100	2009	2009	3	100	565	
4	0070	CARPORT UF	0	100	16	40	640.00	UT	2.50	2.50	100	2014	2014	3	100	1,600	
5	0081	DECKING WI	0	100	0	0	280.00	UT	8.50	8.50	100	2009	2009	3	100	2,380	
6	0169	FENCE/WOOD	0	100	0	0	1.00	UT	0.00	0.00	100	2015	2015	3	100	1,600	

LAND DESCRIPTION

TOTAL OB/XF 16,648

LN	USE CODE	CLS	LAND USE DESCRIPTION	CAP	RD	LOC ZONE	FRONT	DEPTH	TOT LND UTS	UNIT TYPE	DT	DPTH FACT	% COND	TOT ADJ	UNIT PRICE	ADJ UNIT PRICE	LAND VALUE	OTHER ADJUSTMENTS AND NOTES	YEAR	DENSITY	DECL	FRZ	YR	CONSRV
1	0100	C	SFR	100		A-3	0.00	0.00	1.66	AC		1.00	1.00	1.00	18,000.00	18,000.00	29,880							

REVIEW DATE 09/05/2019 BY KR Total Acres: 1.66 Total Land Value: 29,880 Market: 0 Agricultural: 0 Common: 29,880 PRINTED 11/18/2025 BY SYS