LOT 7 COVE AT ROSE CREEK.
WD 1098-537
& EX 1.66 AC AS DESC IN ORB

NICKELSON DANIEL JAY/NICKELSON GAIL F
440 SW EMORYWOOD GLN
LAKE CITY, FL 32024

**2026**

**01-5S-16-03397-107**

## COLUMBIA COUNTY PROPERTY



## BUILDING CHARACTERISTICS

| ELEMENT | CD | CONSTRUCTION |
|---|---|---|
| Exterior Wall | 19 | COMMON BRK 90 |
| Exterior Wall | 21 | STONE 10 |
| Roof Structur | 03 | GABLE/HIP 100 |
| Roof Cover | 03 | COMP SHNGL 100 |
| Interior Wall | 05 | DRYWALL 100 |
| Interior Floo | 12 | HARDWOOD 80 |
| Interior Floo | 15 | HARDTILE 20 |
| Air Condition | 03 | CENTRAL 100 |
| Heating Type | 04 | AIR DUCTED 100 |
| Bedrooms | | 3 100 |
| Bathrooms | | 4.5 100 |
| Frame | 02 | WOOD FRAME 100 |
| Stories | 2. | 2. 100 |
| Architectual | 05 | CONV 100 |
| Units | | 0 100 |
| Quality | 06 | 06 |
| DOR CODE | 0100 | SINGLE FAMILY |
| MAP NUM | | MKT AREA 01 |
| NEIGHBORHOOD/LOC | 1516.00 | 1.00/ |

| AREA TYPE | TOTAL GROSS AREA | PCT OF BASE | YEAR | TOT ADJ AREA | SUBAREA MARKET VALUE |
|---|---|---|---|---|---|
| BAS | 2,999 | 100 | | 2,999 | 361,172 |
| FGR | 980 | 55 | | 539 | 64,912 |
| FOP | 84 | 30 | | 25 | 3,011 |
| FOP | 85 | 30 | | 26 | 3,132 |
| FOP | 972 | 30 | | 292 | 35,166 |
| FUS | 1,242 | 100 | | 1,242 | 149,575 |
| TOTALS | 6,362 | | | 5,123 | 616,967 |

## MARKET ADJUSTMENTS

| TYPE | MDL | EFF. AREA | TOT ADJ PTS | EFF. BASE RATE | REPL. COST NEW | AYB | EYB | ECON | FNCT | | NORM | % COND |
|---|---|---|---|---|---|---|---|---|---|---|---|---|
| 0100 | 01 | 5,123 | 128.0102 | 143.37 | 734,485 | 2009 | 2009 | 0 | 0 | 0 | 16.00 | 84.00 |

1 SINGLE FAM 100% - 2010 Heated Area: 4241 HX Base Yr 2010

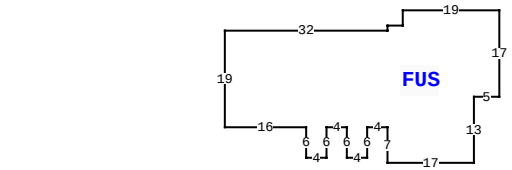


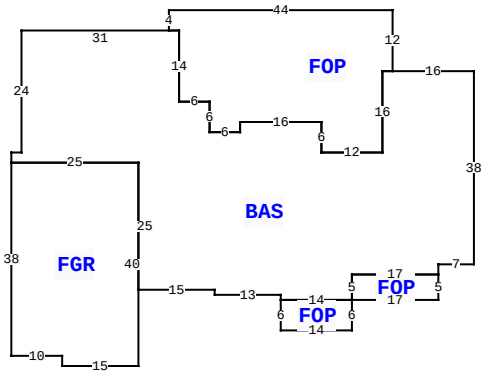


440 SW EMORYWOOD GLN, LAKE CITY

| | | | |
|---|---|---|---|
| BLD DATE | | LGL DATE | |
| XF DATE | | LAND DATE | 04/07/2025 MLU |
| INC DATE | | AG DATE | |

## VALUATION SUMMARY

| | | |
|---|---|---|
| VALUATION BY | | STANDARD |
| Tax Group: 3 | Tax Dist: | |
| BUILDING MARKET VALUE | | 616,967 |
| TOTAL MARKET OB/XF VALUE | | 13,540 |
| TOTAL LAND VALUE - MARKET | | 25,398 |
| TOTAL MARKET VALUE | | 655,905 |
| SOH/AGL Deduction | | 214,645 |
| ASSESSED VALUE | | 441,260 |
| TOTAL EXEMPTION VALUE | HX HB | 50,722 |
| BASE TAXABLE VALUE | | 390,538 |
| TOTAL JUST VALUE | | 655,905 |
| NCON VALUE | | 0 |
| INCOME VALUE | | |
| PREVIOUS YEAR MKT VALUE | | 663,250 |

| PERMIT NUM | DESCRIPTION | AMT | ISSUED |
|---|---|---|---|
| 27521 | SFR | 1,706 | 12/15/2008 |

## SALES DATA

| OFF RECORD Number | DATE | TYPE INST | Q U / | V I / | RSN CD | SALE PRICE |
|---|---|---|---|---|---|---|
| 1098/0537 | 10/03/2006 | WD | Q | V | | 125,000 |

GRANTOR: WESTFIELD INVESTMENT

GRANTEE: DANIEL & GAIL NICKE

## BUILDING NOTES

## BUILDING DIMENSIONS

BAS= W16 FOP= N12 W44 S4 E2 S14 E6 S6 E6 N2 E16 S6 E12 N16 E2$ W2 S16 W12 N6 W16 S2 W6 N6 W6 N14 W31 S24 W2 S2 FGR= S38 E10 S2 E15 N40 W25 $ E25 S25 E15 S1 E13 S1 FOP= S6 E14 N6 W14$ E14 FOP= E17 N5 W17 S5$ N5 E17 N2 E7 N38$ PTR= N40 FUS= N13 E5 N17 W19 S3 W3 S1 W32 S19 E16 S6 E4 N6 E4 S6 E4 N6 E4 S7 E17$ S40$.

## EXTRA FEATURES

| LN | OB/XF CODE | DESCRIPTION | BLD | CAP | L | W | UNITS | UT | Adj R | ADJ UNIT PRICE | ORIG COND | YEAR ON | YEAR ACTUAL | Q | % COND | OB/XF MKT VALUE | NOTES |
|---|---|---|---|---|---|---|---|---|---|---|---|---|---|---|---|---|---|
| 1 | 0180 | FPLC 1STRY | 0 | 100 | 0 | 0 | 2.00 | UT | 2,000.00 | 2,000.00 | 100 | 2009 | 2009 | 3 | 100 | 4,000 | |
| 2 | 0166 | CONC,PAVMT | 0 | 100 | 0 | 0 | 4,240.00 | UT | 2.25 | 2.25 | 100 | 2009 | 2009 | 3 | 100 | 9,540 | |

## LAND DESCRIPTION

TOTAL OB/XF 13,540

| LN | USE CODE | CLS | LAND USE DESCRIPTION | CAP | RD | LOC ZONE | FRONT | DEPTH | TOT LND UTS | UNIT TYPE | DT | DPTH FACT | % COND | TOT ADJ | UNIT PRICE | ADJ UNIT PRICE | LAND VALUE | OTHER ADJUSTMENTS AND NOTES | YEAR | DENSITY | DECL | FRZ | YR | CONSRV |
|---|---|---|---|---|---|---|---|---|---|---|---|---|---|---|---|---|---|---|---|---|---|---|---|---|
| 1 | 0100 | C | SFR | 100 | | A-3 | 0.00 | 0.00 | 1.66 | AC | | 1.00 | 1.00 | 0.85 | 18,000.00 | 15,300.00 | 25,398 | | | | | | | |

REVIEW DATE 09/05/2019 BY KR Total Acres: 1.66 Total Land Value: 25,398 Market: 0 Agricultural: 0 Common: 25,398 PRINTED 11/06/2025 BY SYS