THE N3/4 OF SE1/4 OF SW1/4 &
NE1/4 OF SW1/4 LYING S & E OF
TROY RD & SE1/4 OF NW1/4 S & E

QUAIL HEIGHTS REAL
ESTATE HOLDINGS LLC, 161 SW QUAIL HEIGHTS TER
LAKE CITY, FL 32025

2026

01-4S-16-02678-000

BUILDING CHARACTERISTICS

ELEMENT	CD	CONSTRUCTION
Exterior Wall	15	CONC BLOCK 100
Roof Structur	03	GABLE/HIP 100
Roof Cover	12	MODULAR MT 100
Interior Wall	05	DRYWALL 100
Interior Floo	14	CARPET 100
Air Condition	02	WINDOW 100
Heating Type	03	FORCED AIR 100
Bedrooms		2 100
Bathrooms		1 100
Frame	03	MASONRY 100
Story Height		0 100
RMS		0 100
Stories	2.	2. 100
Units		12 100
Condition Adj	02	02 100
Kitchen Adjus	01	01 100
Quality	05	05
DOR CODE	3800	GOLF COURSES
MAP NUM		MKT AREA 06
NEIGHBORHOOD/LOC	1416.00	1.00/

AREA TYPE	TOTAL GROSS AREA	PCT OF BASE	YEAR	TOT ADJ AREA	SUBAREA MARKET VALUE
BAS	2,400	100		2,400	48,292
CAN	720	30		216	4,346
CAN	720	30		216	4,346
FUS	2,400	100		2,400	48,292
TOTALS	6,240			5,232	105,276

MARKET ADJUSTMENTS

TYPE	MDL	EFF. AREA	TOT ADJ PTS	EFF. BASE RATE	REPL. COST NEW	AYB	EYB	ECON	FNCT		NORM	% COND
2200	03	5,232	92.7180	57.49	300,788	1974	1974	15	0	0	50.00	35.00

1 M/FAM LOW 0% - 0 Heated Area: 4800 HX Base Yr

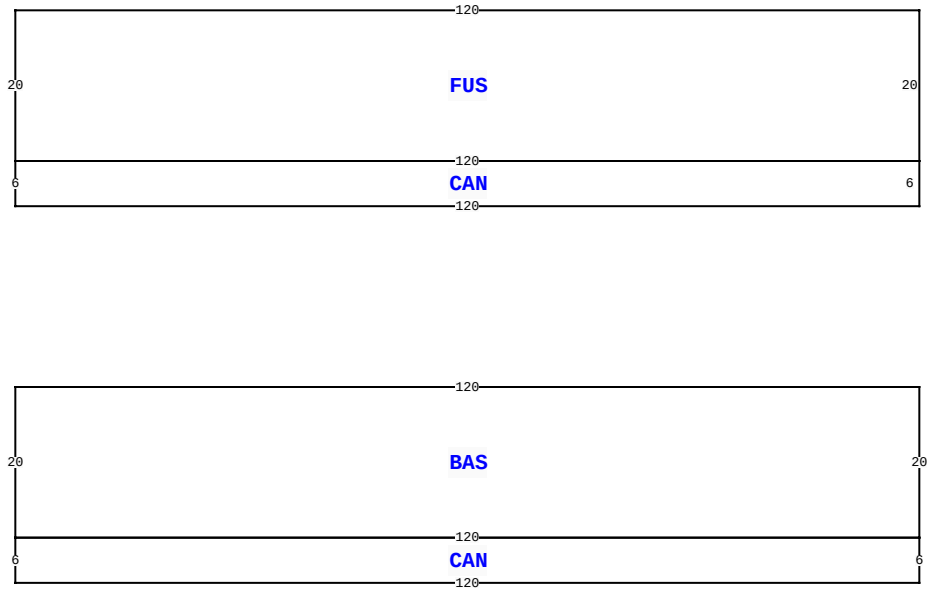

161 SW QUAIL HEIGHTS TER, LAKE CITY

BLD DATE		LGL DATE	
XF DATE		LAND DATE	
INC DATE		AG DATE	

COLUMBIA COUNTY PROPERTY

PAGE 1 of 2 1

VALUATION SUMMARY

VALUATION BY	STANDARD
Tax Group: 1	Tax Dist:
BUILDING MARKET VALUE	342,010
TOTAL MARKET OB/XF VALUE	68,996
TOTAL LAND VALUE - MARKET	637,000
TOTAL MARKET VALUE	1,048,006
SOH/AGL Deduction	0
ASSESSED VALUE	1,048,006
TOTAL EXEMPTION VALUE	0
BASE TAXABLE VALUE	1,048,006
TOTAL JUST VALUE	1,048,006
NCON VALUE	0
INCOME VALUE	
PREVIOUS YEAR MKT VALUE	1,048,006

PERMIT NUM	DESCRIPTION	AMT	ISSUED
000045407	Storage Building	5,000	09/09/2022
21-0629	50X80 POLE BARN		09/23/2021
6377	REMODEL	150,000	09/04/1992

SALES DATA

OFF RECORD Number	DATE	TYPE INST	Q / U	V / I	RSN CD	SALE PRICE
1315/2049	5/26/2016	WD	U	I	37	1,000,000
GRANTOR: PATRIOT GREEN OAK LLC						
GRANTEE: QUAIL HEIGHTS REAL						
1270/2749	2/26/2014	CT	U	I	18	100
GRANTOR: GREEN OAK ESTATES, LL						
GRANTEE: PATRIOT GREEN OAK,						

BUILDING NOTES

BUILDING DIMENSIONS

BAS= W120 S20 CAN= S6 E120 N6 W120$ E120 N20$ PTR= N50 FUS= W120 S20 CAN= S6 E120 N6 W120$ E120 N20$ S50 $.

EXTRA FEATURES

LN	OB/XF CODE	DESCRIPTION	BLD	CAP	L	W	UNITS	UT	Adj R	ADJ UNIT PRICE	ORIG COND	YEAR ON	YEAR ACTUAL	Q	% COND	OB/XF MKT VALUE	NOTES
1	0040	BARN,POLE	0	0	0	0	1.00	UT	0.00	0.00	100	0	0	3	100	700	
2	0040	BARN,POLE	0	0	30	40	1.00	UT	0.00	0.00	100	0	0	3	100	2,160	
3	0030	BARN,MT	0	0	120	26	1.00	UT	10,000.00	10,000.00	50	1972	1972	3	50	5,000	
4	0020	BARN,FR	0	0	0	0	1.00	UT	0.00	0.00	100	0	0	3	100	1,500	
5	0166	CONC,PAVMT	0	0	0	0	1.00	UT	0.00	0.00	100	0	0	3	100	3,500	
6	0280	POOL R/CON	0	0	16	32	512.00	UT	70.00	70.00	100	1989	1989	3	40	14,336	
7	0296	SHED METAL	0	0	10	12	1.00	UT	0.00	0.00	100	0	0	3	100	500	
8	0120	CLFENCE 4	0	0	0	0	1.00	UT	0.00	0.00	100	0	0	3	100	800	
9	0260	PAVEMENT-A	0	0	0	0	1.00	UT	0.00	0.00	100	0	0	3	100	4,500	
10	0297	SHED CONCR	0	0	10	24	1.00	UT	0.00	0.00	100	0	0	3	100	1,500	

TOTAL OB/XF 34,496

LAND DESCRIPTION

LN	USE CODE	CLS	LAND USE DESCRIPTION	CAP	RD	LOC ZONE	FRONT	DEPTH	TOT LND UTS	UNIT TYPE	DT	DPTH FACT	% COND	TOT ADJ	UNIT PRICE	ADJ UNIT PRICE	LAND VALUE	OTHER ADJUSTMENTS AND NOTES	YEAR	DENSITY	DECL	FRZ	YR	CONSRV
1	3800	C	GOLF CORSE	0		00	0.00	0.00	14.00	UT		1.00	1.00	1.00	45,500.00	45,500.00	637,000							

REVIEW DATE 11/18/2021 BY ME Total Acres: 0.00 Total Land Value: 637,000 Market: 0 Agricultural: 0 Common: 637,000 PRINTED 10/06/2025 BY SYS

THE N3/4 OF SE1/4 OF SW1/4 &
NE1/4 OF SW1/4 LYING S & E OF
TROY RD & SE1/4 OF NW1/4 S & E

QUAIL HEIGHTS REAL
ESTATE HOLDINGS LLC, 161 SW QUAIL HEIGHTS TER
LAKE CITY, FL 32025

2026

01-4S-16-02678-000

BUILDING CHARACTERISTICS

ELEMENT	CD	CONSTRUCTION
Exterior Wall	17	MSNRY STUC 100
Roof Structur	04	WOOD TRUSS 100
Roof Cover	12	MODULAR MT 100
Interior Wall	05	DRYWALL 100
Interior Floo	14	CARPET 80
Interior Floo	11	CLAY TILE 20
Ceiling	02	F.NOT SUS 100
Air Condition	03	CENTRAL 100
Heating Type	04	AIR DUCTED 100
Fixtures		20 100
Frame	03	MASONRY 100
Story Height		8 100
RMS		7 100
Stories	1.5	1.5 100
Units		0 100
Condition Adj	02	02 100
Quality	05	05
DOR CODE	3800	GOLF COURSES
MAP NUM		MKT AREA 06
NEIGHBORHOOD/LOC	1416.00	1.00/

AREA TYPE	TOTAL GROSS AREA	PCT OF BASE	YEAR	TOT ADJ AREA	SUBAREA MARKET VALUE
AOF	144	110		158	3,396
AOF	740	110		814	17,493
APT	1,722	100		1,722	37,006
BAS	1,353	100		1,353	29,076
BAS	6,123	100		6,123	131,584
CAN	270	30		81	1,741
CAN	460	30		138	2,966
CAN	544	30		163	3,503
CAN	675	30		202	4,341
FST	42	50		21	452
TOTALS	12,556			11,016	236,734

MARKET ADJUSTMENTS

TYPE	MDL	EFF. AREA	TOT ADJ PTS	EFF. BASE RATE	REPL. COST NEW	AYB	EYB	ECON	FNCT		NORM	% COND
6900	04	11,016	79.5917	42.98	473,468	1972	1972	0	0	0	50.00	50.00

3 CLUB HOUSE 0% - 0 Heated Area: 10082 HX Base Yr

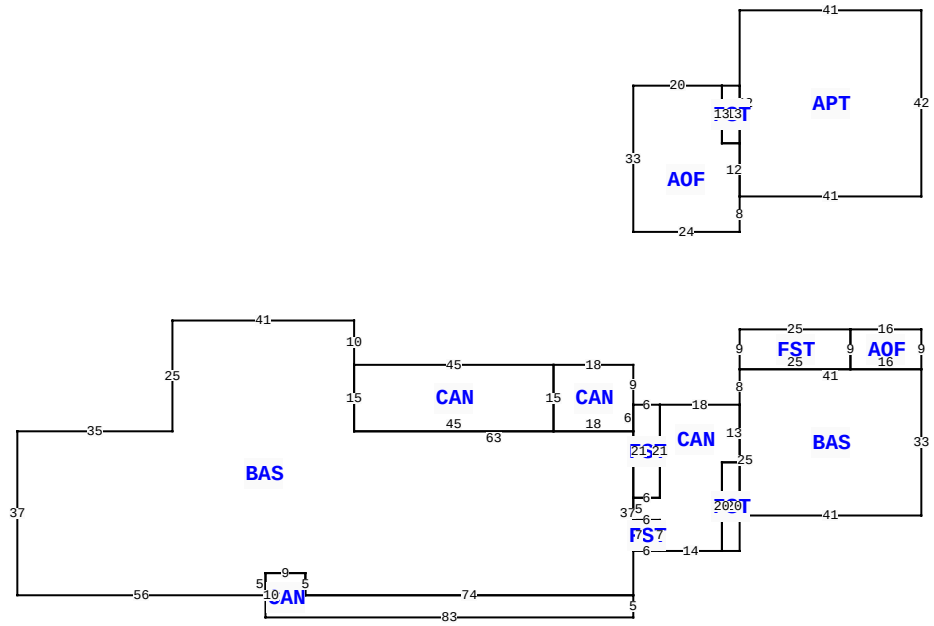

** This building has 14 Sub-Areas

161 SW QUAIL HEIGHTS TER, LAKE CITY

BLD DATE		LGL DATE	
XF DATE		LAND DATE	
INC DATE		AG DATE	

COLUMBIA COUNTY PROPERTY

PAGE 2 of 2 1

VALUATION SUMMARY

VALUATION BY	STANDARD
Tax Group: 1	Tax Dist:
BUILDING MARKET VALUE	342,010
TOTAL MARKET OB/XF VALUE	68,996
TOTAL LAND VALUE - MARKET	637,000
TOTAL MARKET VALUE	1,048,006
SOH/AGL Deduction	0
ASSESSED VALUE	1,048,006
TOTAL EXEMPTION VALUE	0
BASE TAXABLE VALUE	1,048,006
TOTAL JUST VALUE	1,048,006
NCON VALUE	0
INCOME VALUE	
PREVIOUS YEAR MKT VALUE	1,048,006

PERMIT NUM	DESCRIPTION	AMT	ISSUED

SALES DATA

OFF RECORD Number	DATE	TYPE INST	Q U	V I	RSN CD	SALE PRICE
1315/2049	5/26/2016	WD	U	I	37	1,000,000
GRANTOR: PATRIOT GREEN OAK LLC						
GRANTEE: QUAIL HEIGHTS REAL						
1270/2749	2/26/2014	CT	U	I	18	100
GRANTOR: GREEN OAK ESTATES, LL						
GRANTEE: PATRIOT GREEN OAK,						

BUILDING NOTES

BUILDING DIMENSIONS

CAN= W18 CAN= W45 BAS= N10 W41 S25 W35 S37 E56 N5 CAN= E9 S5 E74 S5 W83 N10$ E9 S5 E74 N37 W63 N15 $ S15 E45 N15$ S15 E18 N6 FST= E6 CAN= E18 BAS= N8 FST= E25 N9 W25 S9$E41 AOF= N9 W16 S9 E16$ S33 W41 N25$ S13 FST= S20 W4 N20E4$ W4 S20 W14 FST= N7 W6 S7 E6$ N7 W6 N5 E6 N21$ S21 W6 N21$ N9$ PTR=N30 AOF= E24 N8APT= E41 N42 W41 S42$ N12 W4 N13 FST= E4 S13 W4 N13$ W20 S33$ S30$.

EXTRA FEATURES

L N	OB/XF CODE	DESCRIPTION	BLD	CAP	L	W	UNITS	UT	Adj R	ADJ UNIT PRICE	ORIG COND	YEAR ON	YEAR ACTUAL	Q	% COND	OB/XF MKT VALUE	NOTES
11	0296	SHED METAL	0	0	0	0	1.00	UT	0.00	0.00	100	2017	2017	3	100	1,500	
12	0169	FENCE/WOOD	0	0	0	0	1.00	UT	0.00	0.00	100	2017	2017	3	100	500	
13	0040	BARN,POLE	0	0	80	50	4,000.00	UT	7.00	7.00	100	2022	2021		100	28,000	
14	0296	SHED METAL	0	0	45	20	900.00	UT	5.00	5.00	100	2023	2022		100	4,500	

LAND DESCRIPTION

TOTAL OB/XF 34,500

L N	USE CODE	CLS	LAND USE DESCRIPTION	CAP	R D	LOC ZONE	FRONT	DEPTH	TOT LND UTS	UNIT TYPE	D T	DPTH FACT	% COND	TOT ADJ	UNIT PRICE	ADJ UNIT PRICE	LAND VALUE	OTHER ADJUSTMENTS AND NOTES	YEAR	DENSITY	DECL	FRZ	YR	CONSRV

REVIEW DATE 11/18/2021 BY ME Total Acres: 0.00 Total Land Value: 637,000 Market: 0 Agricultural: 0 Common: 637,000 PRINTED 10/06/2025 BY SYS