FORT WHITE: NE1/4 & E1/2 OF
W1/2 OF BLOCK 43 & S1/2 OF
MCKINNEY ST LYING BETWEEN

FORT WHITE BAPTIST CHURCH
P O BOX 187
FT WHITE, FL 32038

2026

00-00-00-14373-000

COLUMBIA COUNTY PROPERTY

BUILDING CHARACTERISTICS

ELEMENT	CD	CONSTRUCTION
Exterior Wall	31	VINYL SID 100
Roof Structur	03	GABLE/HIP 100
Roof Cover	03	COMP SHNGL 100
Interior Wall	05	DRYWALL 100
Interior Floo	14	CARPET 100
Ceiling	02	F.NOT SUS 100
Air Condition	03	CENTRAL 100
Heating Type	04	AIR DUCTED 100
Fixtures		4 100
Frame	02	WOOD FRAME 100
Story Height		8 100
RMS		4 100
Stories	0	0 100
Units		0 100
Condition Adj	03	03 100
Quality	05	05
DOR CODE	7100	CHURCHES-EX
MAP NUM		MKT AREA 02
NEIGHBORHOOD/LOC	16.00	1.00/

AREA TYPE	TOTAL GROSS AREA	PCT OF BASE	YEAR	TOT ADJ AREA	SUBAREA MARKET VALUE
BAS	1,120	100		1,120	36,047
BAS	2,587	100		2,587	83,263
FOP	48	30		14	451
UOP	228	20		46	1,481
TOTALS	3,983			3,767	121,241

MARKET ADJUSTMENTS

TYPE	MDL	EFF. AREA	TOT ADJ PTS	EFF. BASE RATE	REPL. COST NEW	AYB	EYB	ECON	FNCT		NORM	% COND
9100	04	3,767	83.5948	64.37	242,482	1960	1960	0	0	0	50.00	50.00

1 CHURCH 0% - 0 Heated Area: 3707 HX Base Yr

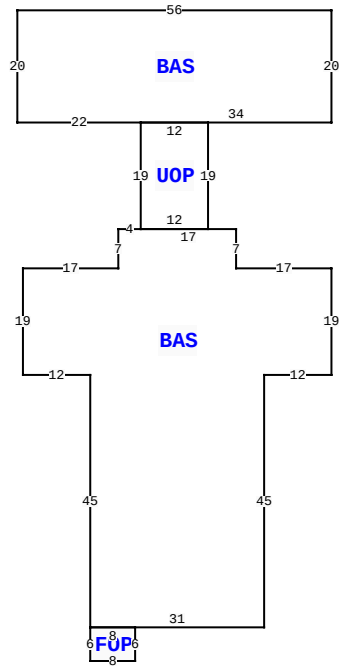

18302 SW STATE ROAD 47 , FORT WHITE

BLD DATE		LGL DATE	
XF DATE		LAND DATE	04/20/2022 MLU
INC DATE		AG DATE	

VALUATION SUMMARY

VALUATION BY		STANDARD
Tax Group: 4	Tax Dist:	
BUILDING MARKET VALUE		163,789
TOTAL MARKET OB/XF VALUE		0
TOTAL LAND VALUE - MARKET		17,010
TOTAL MARKET VALUE		180,799
SOH/AGL Deduction		0
ASSESSED VALUE		180,799
TOTAL EXEMPTION VALUE	02	180,799
BASE TAXABLE VALUE		0
TOTAL JUST VALUE		180,799
NCON VALUE		0
INCOME VALUE		
PREVIOUS YEAR MKT VALUE		180,799

PERMIT NUM	DESCRIPTION	AMT	ISSUED
29585	CHURCH	350	07/29/2011

SALES DATA

OFF RECORD Number	DATE	TYPE INST	Q U	V I	RSN CD	SALE PRICE

BUILDING NOTES

BUILDING DIMENSIONS

BAS= W56 S20 E22 UOP= S19 BAS= W4 S7 W17 S19 E12 S45 FOP= S6 E8 N6 W8$ E31 N45 E12N19 W17 N7 W17$ E12 N19 W12$ E34 N20$.

EXTRA FEATURES

L N	OB/XF CODE	DESCRIPTION	BLD	CAP	L	W	UNITS	UT	Adj R	ADJ UNIT PRICE	ORIG COND	YEAR ON	YEAR ACTUAL	Q	% COND	OB/XF MKT VALUE	NOTES

LAND DESCRIPTION

TOTAL OB/XF 0

L N	USE CODE	CLS	LAND USE DESCRIPTION	CAP	R D	LOC ZONE	FRONT	DEPTH	TOT LND UTS	UNIT TYPE	D T	DPTH FACT	% COND	TOT ADJ	UNIT PRICE	ADJ UNIT PRICE	LAND VALUE	OTHER ADJUSTMENTS AND NOTES	YEAR	DENSITY	DECL	FRZ	YR	CONSRV
1	7100	C	CHURCH	0		00	0.00	0.00	21,262.00	SF		1.00	1.00	1.00	0.80	0.80	17,010							

REVIEW DATE 06/16/2015 BY DF Total Acres: 0.49 Total Land Value: 17,010 Market: 0 Agricultural: 0 Common: 17,010 PRINTED 11/17/2025 BY SYS

FORT WHITE: NE1/4 & E1/2 OF
W1/2 OF BLOCK 43 & S1/2 OF
MCKINNEY ST LYING BETWEEN

FORT WHITE BAPTIST CHURCH
P O BOX 187
FT WHITE, FL 32038

2026

00-00-00-14373-000

COLUMBIA COUNTY PROPERTY

BUILDING CHARACTERISTICS

ELEMENT	CD	CONSTRUCTION
Exterior Wall	26	ALM SIDING 100
Roof Structur	03	GABLE/HIP 100
Roof Cover	01	MINIMUM 100
Interior Wall	05	DRYWALL 100
Interior Floo	14	CARPET 90
Interior Floo	08	SHT VINYL 10
Air Condition	03	CENTRAL 100
Heating Type	03	FORCED AIR 100
Bedrooms		2 100
Bathrooms		1 100
Stories	1.	1. 100
Architectual	01	CONV 100
Units		0 100
Quality	04	04
DOR CODE	7100	CHURCHES-EX

MAP NUM | MKT AREA 02

NEIGHBORHOOD/LOC 16.00 1.00/

AREA TYPE	TOTAL GROSS AREA	PCT OF BASE	YEAR	TOT ADJ AREA	SUBAREA MARKET VALUE
BAS	828	100		828	42,548
TOTALS	828			828	42,548

MARKET ADJUSTMENTS

TYPE	MDL	EFF. AREA	TOT ADJ PTS	EFF. BASE RATE	REPL. COST NEW	AYB	EYB	ECON	FNCT		NORM	% COND
0210	02	828	101.5550	93.43	77,360	1986	1986	0	0	0	45.00	55.00

2 MODULAR 1 0% - 0 Heated Area: 828 HX Base Yr

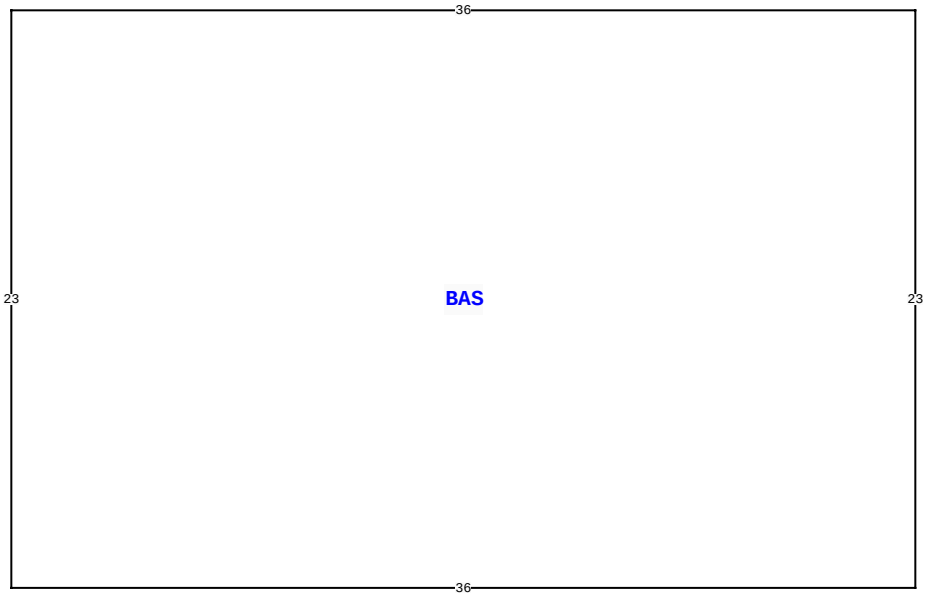

18302 SW STATE ROAD 47 , FORT WHITE

BLD DATE		LGL DATE	
XF DATE		LAND DATE	04/20/2022 MLU
INC DATE		AG DATE	

VALUATION SUMMARY

VALUATION BY		STANDARD
Tax Group: 4	Tax Dist:	
BUILDING MARKET VALUE		163,789
TOTAL MARKET OB/XF VALUE		0
TOTAL LAND VALUE - MARKET		17,010
TOTAL MARKET VALUE		180,799
SOH/AGL Deduction		0
ASSESSED VALUE		180,799
TOTAL EXEMPTION VALUE	02	180,799
BASE TAXABLE VALUE		0
TOTAL JUST VALUE		180,799
NCON VALUE		0
INCOME VALUE		
PREVIOUS YEAR MKT VALUE		180,799

PERMIT NUM	DESCRIPTION	AMT	ISSUED

SALES DATA

OFF RECORD Number	DATE	TYPE INST	Q / U	V / I	RSN CD	SALE PRICE

BUILDING NOTES

BUILDING DIMENSIONS

BAS= W36 S23 E36 N23$.

EXTRA FEATURES

L N	OB/XF CODE	DESCRIPTION	BLD	CAP	L	W	UNITS	UT	Adj R	ADJ UNIT PRICE	ORIG COND	YEAR ON	YEAR ACTUAL	Q	% COND	OB/XF MKT VALUE	NOTES

LAND DESCRIPTION

TOTAL OB/XF 0

L N	USE CODE	CLS	LAND USE DESCRIPTION	CAP	R D	LOC ZONE	FRONT	DEPTH	TOT LND UTS	UNIT TYPE	D T	DPTH FACT	% COND	TOT ADJ	UNIT PRICE	ADJ UNIT PRICE	LAND VALUE	OTHER ADJUSTMENTS AND NOTES	YEAR	DENSITY	DECL	FRZ	YR	CONSRV

REVIEW DATE 06/16/2015 BY DF Total Acres: 0.49 Total Land Value: 17,010 Market: 0 Agricultural: 0 Common: 17,010 PRINTED 11/17/2025 BY SYS