FT WHITE: ALL BLOCKS 22 & 23
& 60 FT STRIP LYING BETWEEN
SAID BLOCKS.

LANCE JAMES M/LANCE BEVERLY LORRIE
321 SW WELLS ST
FORT WHITE, FL 32038-3418

2026

00-00-00-14350-000

COLUMBIA COUNTY PROPERTY

BUILDING CHARACTERISTICS

ELEMENT	CD	CONSTRUCTION
Exterior Wall	04	SINGLE SID 100
Roof Structur	03	GABLE/HIP 100
Roof Cover	07	CONC TILE 100
Interior Wall	02	WALL BD/WD 100
Interior Floo	09	PINE WOOD 100
Air Condition	02	WINDOW 100
Heating Type	02	CONVECTION 100
Bedrooms		4 100
Bathrooms		3 100
Frame	03	MASONRY 100
Stories	2.	2. 100
Architectual	05	CONV 100
Units		1 100
Condition Adj	03	03 100
Kitchen Adjus	01	01 100
Quality	03	03

DOR CODE	0100	SINGLE FAMILY	
MAP NUM		MKT AREA	02
NEIGHBORHOOD/LOC	16.00	1.00/	

AREA TYPE	TOTAL GROSS AREA	PCT OF BASE	YEAR	TOT ADJ AREA	SUBAREA MARKET VALUE
BAS	1,399	100		1,399	64,000
BAS	1,406	100		1,406	64,320
FOP	192	30		58	2,653
FOP	320	30		96	4,391
FOP	320	30		96	4,391
FSP	200	40		80	3,660
UCP	336	20		67	3,065
UCP	637	20		127	5,810
UDU	744	55		409	18,710
UST	25	45		11	503
TOTALS	5,579			3,749	171,506

MARKET ADJUSTMENTS

TYPE	MDL	EFF. AREA	TOT ADJ PTS	EFF. BASE RATE	REPL. COST NEW	AYB	EYB	ECON	FNCT		NORM	% COND
0100	01	3,749	62.8425	70.38	263,855	1900	1900	0	0	0	35.00	65.00

1 SINGLE FAM 100% - 0 Heated Area: 2805 HX Base Yr

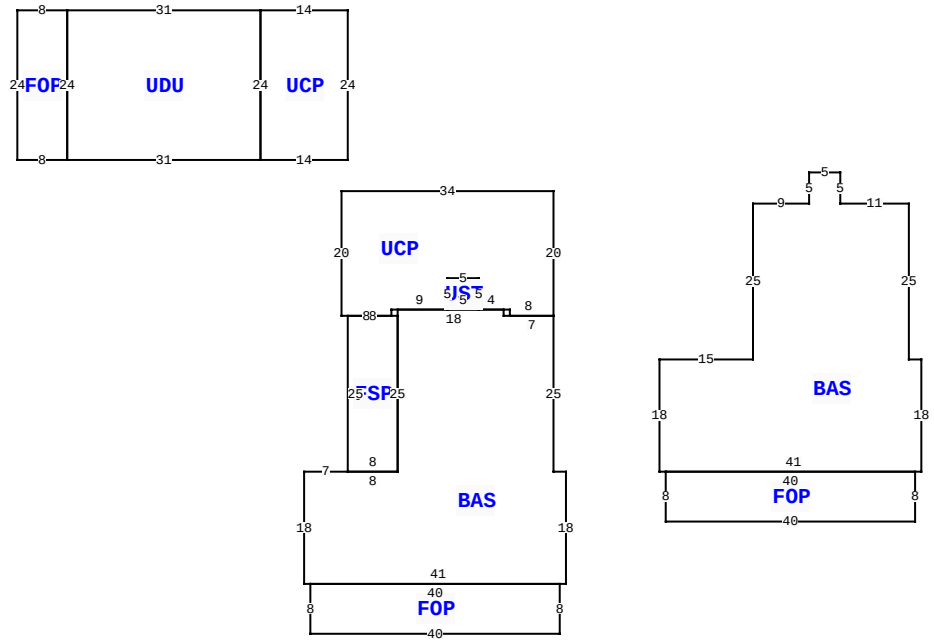

320 SW DORTCH ST, FORT WHITE

BLD DATE		LGL DATE	
XF DATE		LAND DATE	04/20/2022 MLU
INC DATE		AG DATE	

COLUMBIA COUNTY PROPERTY — VALUATION SUMMARY

VALUATION BY		STANDARD
Tax Group: 4	Tax Dist:	
BUILDING MARKET VALUE		171,506
TOTAL MARKET OB/XF VALUE		224
TOTAL LAND VALUE - MARKET		64,512
TOTAL MARKET VALUE		236,242
SOH/AGL Deduction		131,248
ASSESSED VALUE		104,994
TOTAL EXEMPTION VALUE	HX HB	50,722
BASE TAXABLE VALUE		54,272
TOTAL JUST VALUE		236,242
NCON VALUE		0
INCOME VALUE		
PREVIOUS YEAR MKT VALUE		236,242

PERMIT NUM	DESCRIPTION	AMT	ISSUED
000051429	Solar Power Syste	25,000	11/07/2024

SALES DATA

OFF RECORD Number	DATE	TYPE INST	Q U	V I	RSN CD	SALE PRICE
0758/1372	3/27/1992	WD	Q	I		60,000

GRANTOR: CITY OF FORT WHITE

GRANTEE: JAMES M LANCE

BUILDING NOTES

BUILDING DIMENSIONS

BAS= W7 S18E1 FOP= S8 E40 N8 W40$ E41 N18 W2 N25 UCP= N20 W34 S20 E8 N1 E9 UST= E5N5 W5 S5$ N5 E5 S5 E4 S1 E8$ W7 N1 W18 S1 FSP= W8 S25 E8 N25$ S25 W8$ PTR=E50 BAS= E1 FOP= S8 E40N8 W40$ E41 N18 W2 N25 W11 N5 W5 S5 W9 S25 W15 S18$ W50$ PTR= N50 UCP= N24 W14 UDU= W31 FOP= W8 S24 E8 N24$ S24 E31 N24$ S24 E14$ S50 $.

EXTRA FEATURES

LN	OB/XF CODE	DESCRIPTION	BLD	CAP	L	W	UNITS	UT	Adj R	ADJ UNIT PRICE	ORIG COND	YEAR ON	YEAR ACTUAL	Q	% COND	OB/XF MKT VALUE	NOTES
1	0252	LEAN-TO W/	0	100	8	24	192.00	UT	2.00	2.00	20	1993	1993	3	20	77	
2	0294	SHED WOOD/	0	100	7	14	98.00	UT	7.50	7.50	20	1993	1993	3	20	147	

LAND DESCRIPTION

TOTAL OB/XF 224

LN	USE CODE	CLS	LAND USE DESCRIPTION	CAP	RD	LOC ZONE	FRONT	DEPTH	TOT LND UTS	UNIT TYPE	DT	DPTH FACT	% COND	TOT ADJ	UNIT PRICE	ADJ UNIT PRICE	LAND VALUE	OTHER ADJUSTMENTS AND NOTES	YEAR	DENSITY	DECL	FRZ	YR	CONSRV
1	0100	C	SFR	100		00	210.00	480.00	100,800.00	SF		1.00	1.00	0.80	0.80	0.64	64,512							

REVIEW DATE 06/17/2015 BY DF Total Acres: 2.31 Total Land Value: 64,512 Market: 0 Agricultural: 0 Common: 64,512 PRINTED 11/18/2025 BY SYS