LOT 16 FORT WHITE MANOR S/D.
730-1388, 848-652, 1000-615, WD

THOMAS KIM WENDELL JR/THOMAS MELISSA JOAN
6129 SW CR 18
FORT WHITE, FL 32038-3301

2026

00-00-00-14330-116

COLUMBIA COUNTY PROPERTY

BUILDING CHARACTERISTICS

ELEMENT	CD	CONSTRUCTION
Exterior Wall	32	HARDIE BRD 100
Roof Structur	03	GABLE/HIP 100
Roof Cover	14	PREFIN MT 100
Interior Wall	05	DRYWALL 100
Interior Floo	14	CARPET 70
Interior Floo	15	HARDTILE 30
Air Condition	03	CENTRAL 100
Heating Type	04	AIR DUCTED 100
Bedrooms		3 100
Bathrooms		2 100
Frame	02	WOOD FRAME 100
Stories	1.	1. 100
Architectual	05	CONV 100
Units		0 100
Quality	07	07

DOR CODE 0100 SINGLE FAMILY
MAP NUM | MKT AREA 02
NEIGHBORHOOD/LOC 34616.050 1.00/

AREA TYPE	TOTAL GROSS AREA	PCT OF BASE	YEAR	TOT ADJ AREA	SUBAREA MARKET VALUE
BAS	1,936	100		1,936	234,170
FCP	484	25		121	14,635
FOP	190	30		57	6,895
FOP	296	30		89	10,765
UDG	780	55		429	51,890
TOTALS	3,686			2,632	318,356

MARKET ADJUSTMENTS

TYPE	MDL	EFF. AREA	TOT ADJ PTS	EFF. BASE RATE	REPL. COST NEW	AYB	EYB	ECON	FNCT		NORM	% COND
0100	01	2,632	130.1146	145.73	383,561	2008	2008	0	0	0	17.00	83.00

1 SINGLE FAM 100% - 2018 Heated Area: 1936 HX Base Yr 2018

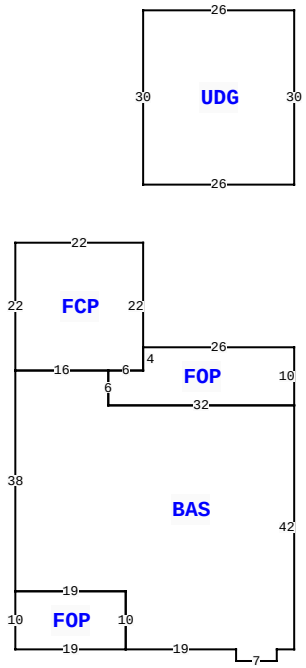

6129 SW COUNTY ROAD 18 , FORT WHITE

BLD DATE		LGL DATE	
XF DATE		LAND DATE	03/21/2022 MLU
INC DATE		AG DATE	

VALUATION SUMMARY

VALUATION BY		STANDARD
Tax Group: 4	Tax Dist:	
BUILDING MARKET VALUE		318,356
TOTAL MARKET OB/XF VALUE		26,521
TOTAL LAND VALUE - MARKET		15,000
TOTAL MARKET VALUE		359,877
SOH/AGL Deduction		102,582
ASSESSED VALUE		257,295
TOTAL EXEMPTION VALUE	HX HB	50,722
BASE TAXABLE VALUE		206,573
TOTAL JUST VALUE		359,877
NCON VALUE		0
INCOME VALUE		
PREVIOUS YEAR MKT VALUE		363,712

PERMIT NUM	DESCRIPTION	AMT	ISSUED
000049137	Storage Building	10,757	02/01/2024
000048637	Swimming Pool and	47,000	11/13/2023
26400	SFR	494	11/08/2007
26401	GARAGE	107	11/08/2007

SALES DATA

OFF RECORD Number	DATE	TYPE INST	Q U	V I	RSN CD	SALE PRICE
1338/2116	6/13/2017	WD	Q	I	01	200,000
GRANTOR: JOHN R & KIMBERLY TEE						
GRANTEE: KIM WENDELL JR & ME						
1132/1370	9/28/2007	WD	Q	V		39,000
GRANTOR: BORCHARDT						
GRANTEE: TEELE						

BUILDING NOTES

BUILDING DIMENSIONS

BAS= N42 FOP= N10 W26 S4 W6 S6 E32$ W32 N6 FCP= E6 N22 W22 S22 E16$ W16 S38 FOP= S10 E19 N10 W19$ E19 S10 E19 S2 E7 N2 E3$ PTR= N80 UDG= N30 W26 S30 E26$ S80$.

EXTRA FEATURES

LN	OB/XF CODE	DESCRIPTION	BLD	CAP	L	W	UNITS	UT	Adj R	ADJ UNIT PRICE	ORIG COND	YEAR ON	YEAR ACTUAL	Q	% COND	OB/XF MKT VALUE	NOTES
1	0180	FPLC 1STRY	0	100	0	0	1.00	UT	2,000.00	2,000.00	100	2008	2008	3	100	2,000	
2	0166	CONC,PAVMT	0	100	0	0	1,428.00	UT	3.00	3.00	100	2008	2008	3	100	4,284	
3	0280	POOL R/CON	0	100	12	24	288.00	UT	70.00	70.00	100	2025	2024		98	19,757	
4	0166	CONC,PAVMT	0	100	0	0	160.00	UT	3.00	3.00	100	2025	2024		100	480	

LAND DESCRIPTION

TOTAL OB/XF 26,521

LN	USE CODE	CLS	LAND USE DESCRIPTION	CAP	RD	LOC ZONE	FRONT	DEPTH	TOT LND UTS	UNIT TYPE	DT	DPTH FACT	% COND	TOT ADJ	UNIT PRICE	ADJ UNIT PRICE	LAND VALUE	OTHER ADJUSTMENTS AND NOTES	YEAR	DENSITY	DECL	FRZ	YR	CONSRV
1	0100	C	SFR	100		RSF/MH	0.00	0.00	1.00	LT		1.00	1.00	1.00	15,000.00	15,000.00	15,000							

REVIEW DATE 05/06/2024 BY randall Total Acres: 1.01 Total Land Value: 15,000 Market: 0 Agricultural: 0 Common: 15,000 PRINTED 11/18/2025 BY SYS