S DIV: LOTS 4 & 5 BLOCK A WILDER
DC 980-2077, 985-2577 THUR 2580,

TRAN DUC VAN/NGO TIEN DUY
8813 131ST ST
LIVE OAK, FL 32060

2026

00-00-00-14254-000

COLUMBIA COUNTY PROPERTY

BUILDING CHARACTERISTICS

ELEMENT	CD	CONSTRUCTION
Exterior Wall	03	BELOW AVG. 100
Roof Structur	03	GABLE/HIP 100
Roof Cover	03	COMP SHNGL 100
Interior Wall	02	WALL BD/WD 100
Interior Floo	14	CARPET 80
Interior Floo	06	VINYL ASB 20
Air Condition	03	CENTRAL 100
Heating Type	03	FORCED AIR 100
Bedrooms		3 100
Bathrooms		1 100
Frame	01	NONE 100
Stories	1.	1. 100
Architectual	05	CONV 100
Units		0 100
Condition Adj	01	01 100
Kitchen Adjus	01	01 100
Quality	05	05
DOR CODE	0100	SINGLE FAMILY
MAP NUM		MKT AREA 06
NEIGHBORHOOD/LOC	870317.00	1.00/

AREA TYPE	TOTAL GROSS AREA	PCT OF BASE	YEAR	TOT ADJ AREA	SUBAREA MARKET VALUE
BAS	1,356	100		1,356	58,640
UCP	228	20		46	1,989
UDU	276	55		152	6,573
USP	84	35		29	1,254
UST	50	45		22	952
TOTALS	1,994			1,605	69,408

MARKET ADJUSTMENTS

TYPE	MDL	EFF. AREA	TOT ADJ PTS	EFF. BASE RATE	REPL. COST NEW	AYB	EYB	ECON	FNCT		NORM	% COND
0100	01	1,605	59.4000	66.53	106,781	1945	1945	0	0	0	35.00	65.00

1 SINGLE FAM 0% - 0 Heated Area: 1356 HX Base Yr

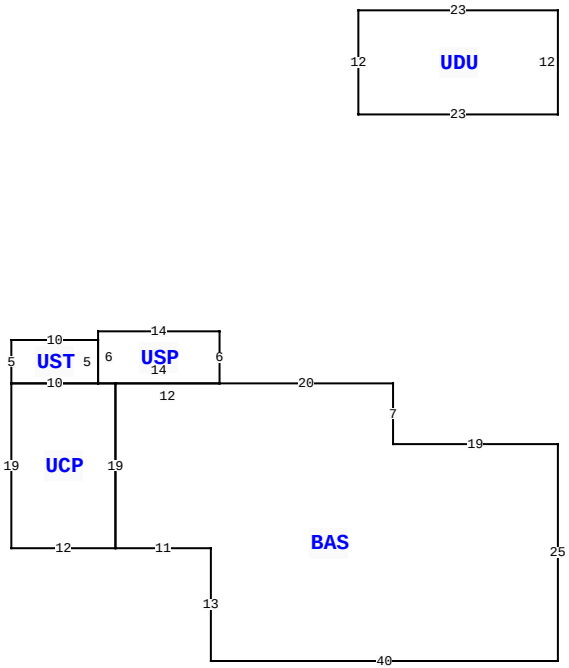

1209 S MARION AVE, LAKE CITY

BLD DATE		LGL DATE	
XF DATE		LAND DATE	
INC DATE		AG DATE	

VALUATION SUMMARY

VALUATION BY	STANDARD
Tax Group: 1	Tax Dist:
BUILDING MARKET VALUE	69,408
TOTAL MARKET OB/XF VALUE	0
TOTAL LAND VALUE - MARKET	15,000
TOTAL MARKET VALUE	84,408
SOH/AGL Deduction	0
ASSESSED VALUE	84,408
TOTAL EXEMPTION VALUE	0
BASE TAXABLE VALUE	84,408
TOTAL JUST VALUE	84,408
NCON VALUE	0
INCOME VALUE	
PREVIOUS YEAR MKT VALUE	84,408

PERMIT NUM	DESCRIPTION	AMT	ISSUED

SALES DATA

OFF RECORD Number	DATE	TYPE INST	Q U /	V I /	RSN CD	SALE PRICE
1384/0165	5/07/2019	WD	Q	I	01	50,000
GRANTOR: COLUMBIA INVESTMENTS						
GRANTEE: DUC VAN TRAN & TIEN						
0995/2350	9/25/2003	WD	Q	I		58,000
GRANTOR: HARDEE, F CREWS, J D						
GRANTEE: COLUMBIA INVESTMENT						

BUILDING NOTES

BUILDING DIMENSIONS

BAS= W19 N7 W20 USP= N6 W14 S6 E14$ W12 UCP= W2 UST= N5 W10 S5 E10$ W10 S19 E12 N19$ S19 E11 S13 E40 N25$ PTR=N50 UDU= W23 S12 E23 N12$ S50$.

EXTRA FEATURES

LN	OB/XF CODE	DESCRIPTION	BLD	CAP	L	W	UNITS	UT	Adj R	ADJ UNIT PRICE	ORIG COND	YEAR ON	YEAR ACTUAL	Q	% COND	OB/XF MKT VALUE	NOTES

LAND DESCRIPTION

TOTAL OB/XF 0

LN	USE CODE	CLS	LAND USE DESCRIPTION	CAP	RD	LOC ZONE	FRONT	DEPTH	TOT LND UTS	UNIT TYPE	DT	DPTH FACT	% COND	TOT ADJ	UNIT PRICE	ADJ UNIT PRICE	LAND VALUE	OTHER ADJUSTMENTS AND NOTES	YEAR	DENSITY	DECL	FRZ	YR	CONSRV
1	0100	C	SFR	0		*RSF-2	200.00	200.00	20,000.00	SF		1.00	1.00	1.00	0.75	0.75	15,000							

REVIEW DATE 10/05/2016 BY DF Total Acres: 0.46 Total Land Value: 15,000 Market: 0 Agricultural: 0 Common: 15,000 PRINTED 11/06/2025 BY SYS