S DIV: LOT 1 FIELDS BUILDING
SUPPLY S/D. LE 954-308,WD 1224
-184, DC 1195-161,PB 1277-2282

NORRIS TANA
3035 SW PINEMOUNT RD
LAKE CITY, FL 32024

**2026**

**00-00-00-14116-000**

## BUILDING CHARACTERISTICS

| ELEMENT | CD | CONSTRUCTION |
|---|---|---|
| Exterior Wall | 15 | CONC BLOCK 100 |
| Roof Structur | 03 | GABLE/HIP 100 |
| Roof Cover | 12 | MODULAR MT 100 |
| Interior Wall | 05 | DRYWALL 100 |
| Interior Floo | 06 | VINYL ASB 100 |
| Air Condition | 02 | WINDOW 100 |
| Heating Type | 01 | NONE 100 |
| Bedrooms | | 3 100 |
| Bathrooms | | 1 100 |
| Frame | 01 | NONE 100 |
| Stories | 1. | 1. 100 |
| Architectual | 05 | CONV 100 |
| Units | | 0 100 |
| Condition Adj | 02 | 02 100 |
| Kitchen Adjus | 01 | 01 100 |
| Quality | 05 | 05 |
| DOR CODE | 0100 | SINGLE FAMILY |
| MAP NUM | | MKT AREA 06 |
| NEIGHBORHOOD/LOC | 32317.100 | 1.00/ |

| AREA TYPE | TOTAL GROSS AREA | PCT OF BASE | YEAR | TOT ADJ AREA | SUBAREA MARKET VALUE |
|---|---|---|---|---|---|
| BAS | 934 | 100 | | 934 | 61,797 |
| UCP | 316 | 20 | | 63 | 4,168 |
| UDU | 192 | 55 | | 106 | 7,014 |
| UST | 50 | 45 | | 22 | 1,455 |
| TOTALS | 1,492 | | | 1,125 | 74,434 |

## MARKET ADJUSTMENTS

| TYPE | MDL | EFF. AREA | TOT ADJ PTS | EFF. BASE RATE | REPL. COST NEW | AYB | EYB | ECON | FNCT | | NORM | % COND |
|---|---|---|---|---|---|---|---|---|---|---|---|---|
| 0100 | 01 | 1,125 | 90.8820 | 101.79 | 114,514 | 1957 | 1957 | 0 | 0 | 0 | 35.00 | 65.00 |

1 SINGLE FAM 0% - 0 Heated Area: 934 HX Base Yr

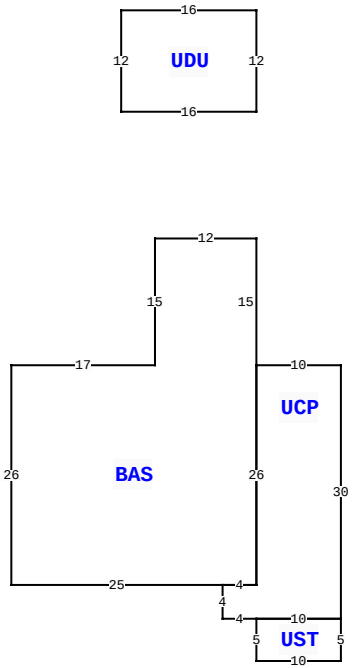


129 SW IVAN ST, LAKE CITY

| | | | |
|---|---|---|---|
| BLD DATE | | LGL DATE | |
| XF DATE | | LAND DATE | |
| INC DATE | | AG DATE | |

## COLUMBIA COUNTY PROPERTY

PAGE 1 of 1 1

### VALUATION SUMMARY

| | |
|---|---|
| VALUATION BY | STANDARD |
| Tax Group: 1 | Tax Dist: |
| BUILDING MARKET VALUE | 74,434 |
| TOTAL MARKET OB/XF VALUE | 360 |
| TOTAL LAND VALUE - MARKET | 6,038 |
| TOTAL MARKET VALUE | 80,832 |
| SOH/AGL Deduction | 0 |
| ASSESSED VALUE | 80,832 |
| TOTAL EXEMPTION VALUE | 0 |
| BASE TAXABLE VALUE | 80,832 |
| TOTAL JUST VALUE | 80,832 |
| NCON VALUE | 0 |
| INCOME VALUE | |
| PREVIOUS YEAR MKT VALUE | 80,832 |

| PERMIT NUM | DESCRIPTION | AMT | ISSUED |
|---|---|---|---|
| 32 | MAINT/ALTR | 0 | 01/19/2018 |

## SALES DATA

| OFF RECORD Number | DATE | TYPE INST | Q U / | V I / | RSN CD | SALE PRICE |
|---|---|---|---|---|---|---|
| 1343/0366 | 8/22/2017 | WD | Q | I | 01 | 20,000 |
| GRANTOR: WENDELL W WHEELER FAM | | | | | | |
| GRANTEE: TANA NORRIS | | | | | | |
| 1296/0835 | 6/08/2015 | PR | U | I | 11 | 0 |
| GRANTOR: REBECCA L DAMPIER(PR | | | | | | |
| GRANTEE: REBECCA L DAMPIER, | | | | | | |

## BUILDING NOTES

## BUILDING DIMENSIONS

BAS= N15 W12 S15 W17 S26 E25 UCP= S4 E4UST= S5 E10 N5 W10$ E10 N30 W10 S26 W4 $ E4 N26$ PTR=N30 UDU= N12 W16 S12 E16$S30$.

## EXTRA FEATURES

| LN | OB/XF CODE | DESCRIPTION | BLD | CAP | L | W | UNITS | UT | Adj R | ADJ UNIT PRICE | ORIG COND | YEAR ON | YEAR ACTUAL | Q | % COND | OB/XF MKT VALUE | NOTES |
|---|---|---|---|---|---|---|---|---|---|---|---|---|---|---|---|---|---|
| 1 | 0120 | CLFENCE 4 | 0 | 0 | 0 | 0 | 1.00 | UT | 0.00 | 0.00 | 100 | 1993 | 1993 | 3 | 100 | 300 | |
| 2 | 0166 | CONC,PAVMT | 0 | 0 | 0 | 0 | 1.00 | UT | 0.00 | 0.00 | 100 | 2011 | 2011 | 3 | 100 | 60 | |

## LAND DESCRIPTION

TOTAL OB/XF 360

| LN | USE CODE | CLS | LAND USE DESCRIPTION | CAP | RD | LOC ZONE | FRONT | DEPTH | TOT LND UTS | UNIT TYPE | DT | DPTH FACT | % COND | TOT ADJ | UNIT PRICE | ADJ UNIT PRICE | LAND VALUE | OTHER ADJUSTMENTS AND NOTES | YEAR | DENSITY | DECL | FRZ | YR | CONSRV |
|---|---|---|---|---|---|---|---|---|---|---|---|---|---|---|---|---|---|---|---|---|---|---|---|---|
| 1 | 0100 | C | SFR | 0 | | RMF-2 | 70.00 | 100.00 | 7,000.00 | SF | | 1.00 | 1.00 | 1.15 | 0.75 | 0.86 | 6,038 | | | | | | | |

REVIEW DATE 06/05/2018 BY HC Total Acres: 0.16 Total Land Value: 6,038 Market: 0 Agricultural: 0 Common: 6,038 PRINTED 11/18/2025 BY SYS