S DIV: LOT 2 BLOCK 12 LAKE
VILLAS ADDITION #5.
427-644, 748-522, WD 1100-1169

CARTER JENNA M/CARTER JAMES DERRICK
362 SW TULAROSA LN
LAKE CITY, FL 32025

2026

00-00-00-14080-000

COLUMBIA COUNTY PROPERTY

BUILDING CHARACTERISTICS

ELEMENT	CD	CONSTRUCTION
Exterior Wall	31	VINYL SID 100
Roof Structur	08	IRREGULAR 100
Roof Cover	03	COMP SHNGL 100
Interior Wall	05	DRYWALL 100
Interior Floo	09	PINE WOOD 70
Interior Floo	15	HARDTILE 30
Air Condition	03	CENTRAL 100
Heating Type	04	AIR DUCTED 100
Bedrooms		3 100
Bathrooms		1 100
Frame	01	NONE 100
Stories	1.	1. 100
Architectual	05	CONV 100
Units		0 100
Condition Adj	04	04 100
Kitchen Adjus	01	01 100
Quality	05	05
DOR CODE	0100	SINGLE FAMILY
MAP NUM		MKT AREA 06
NEIGHBORHOOD/LOC	870317.00	1.00/

AREA TYPE	TOTAL GROSS AREA	PCT OF BASE	YEAR	TOT ADJ AREA	SUBAREA MARKET VALUE
BAS	1,251	100		1,251	109,190
FSP	96	40		38	3,317
UBM	315	20		63	5,499
UOP	200	20		40	3,491
TOTALS	1,862			1,392	121,497

MARKET ADJUSTMENTS

TYPE	MDL	EFF. AREA	TOT ADJ PTS	EFF. BASE RATE	REPL. COST NEW	AYB	EYB	ECON	FNCT		NORM	% COND
0100	01	1,392	119.8912	134.28	186,918	1952	1952	0	0	0	35.00	65.00

1 SINGLE FAM 100% - 2023 Heated Area: 1251 HX Base Yr 2023

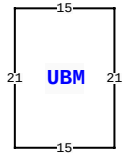

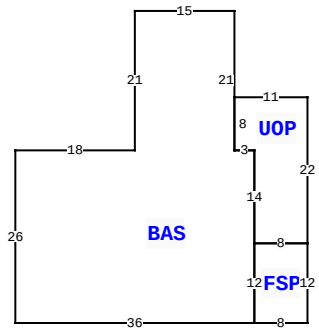

362 SW TULAROSA LN, LAKE CITY

BLD DATE		LGL DATE	
XF DATE		LAND DATE	04/21/2023 MLU
INC DATE		AG DATE	

VALUATION SUMMARY

VALUATION BY		STANDARD
Tax Group: 1	Tax Dist:	
BUILDING MARKET VALUE		121,497
TOTAL MARKET OB/XF VALUE		800
TOTAL LAND VALUE - MARKET		18,500
TOTAL MARKET VALUE		140,797
SOH/AGL Deduction		6,040
ASSESSED VALUE		134,757
TOTAL EXEMPTION VALUE	HX HB	50,722
BASE TAXABLE VALUE		84,035
TOTAL JUST VALUE		140,797
NCON VALUE		0
INCOME VALUE		
PREVIOUS YEAR MKT VALUE		140,797

PERMIT NUM	DESCRIPTION	AMT	ISSUED

SALES DATA

OFF RECORD Number	DATE	TYPE INST	Q / U	V / I	RSN CD	SALE PRICE
1420/2131	9/30/2020	WD	Q	I	01	109,900
GRANTOR: STUART JOHNSON						
GRANTEE: JENNA M & JAMES DER						
1258/1482	7/19/2013	WD	U	I	38	37,000
GRANTOR: PAUL D & ELIZABETH A						
GRANTEE: STUART JOHNSON						

BUILDING NOTES

BUILDING DIMENSIONS

BAS= W15 S21 W18 S26 E36 FSP= E8 N12 W8 S12$ N12 UOP= E8 N22 W11 S8 E3 S14$ N14 W3 N21$ PTR=N30 UBM= N21 W15 S21 E15$ S30$.

EXTRA FEATURES

LN	OB/XF CODE	DESCRIPTION	BLD	CAP	L	W	UNITS	UT	Adj R	ADJ UNIT PRICE	ORIG COND	YEAR ON	YEAR ACTUAL	Q	% COND	OB/XF MKT VALUE	NOTES
1	0169	FENCE/WOOD	0	100	0	0	1.00	UT	0.00	0.00	100	1993	1993	3	100	500	
2	0166	CONC,PAVMT	0	100	0	0	1.00	UT	0.00	0.00	100	2012	2012	3	100	300	

LAND DESCRIPTION

TOTAL OB/XF 800

LN	USE CODE	CLS	LAND USE DESCRIPTION	CAP	RD	LOC ZONE	FRONT	DEPTH	TOT LND UTS	UNIT TYPE	DT	DPTH FACT	% COND	TOT ADJ	UNIT PRICE	ADJ UNIT PRICE	LAND VALUE	OTHER ADJUSTMENTS AND NOTES	YEAR	DENSITY	DECL	FRZ	YR	CONSRV
1	0100	C	SFR	100		RSF-2	90.00	125.00	1.00	LT		1.00	1.00	1.00	18,500.00	18,500.00	18,500							

REVIEW DATE 09/28/2016 BY DF Total Acres: 0.26 Total Land Value: 18,500 Market: 0 Agricultural: 0 Common: 18,500 PRINTED 11/18/2025 BY SYS