S DIV: LOT 15 & N1/2 LOT 14 REPL
VILLAS S/D.

CHRISTIE STEPHEN M
732 SW EL PRADO AVE
LAKE CITY, FL 32025-5157

2026

00-00-00-14009-000

COLUMBIA COUNTY PROPERTY

BUILDING CHARACTERISTICS

ELEMENT	CD	CONSTRUCTION
Exterior Wall	31	VINYL SID 100
Roof Structur	03	GABLE/HIP 100
Roof Cover	03	COMP SHNGL 100
Interior Wall	04	PLYWOOD 50
Interior Wall	05	DRYWALL 50
Interior Floo	09	PINE WOOD 100
Air Condition	03	CENTRAL 100
Heating Type	04	AIR DUCTED 100
Bedrooms		5 100
Bathrooms		3 100
Frame	01	NONE 100
Stories	1.5	1.5 100
Architectual	05	CONV 100
Units		0 100
Condition Adj	03	03 100
Kitchen Adjus	01	01 100
Quality	05	05
DOR CODE	0100	SINGLE FAMILY
MAP NUM		MKT AREA 06
NEIGHBORHOOD/LOC	32317.140	1.00/

AREA TYPE	TOTAL GROSS AREA	PCT OF BASE	YEAR	TOT ADJ AREA	SUBAREA MARKET VALUE
BAS	1,740	100		1,740	125,722
FGR	224	55		123	8,887
FOP	60	30		18	1,301
FSP	600	40		240	17,341
FST	84	55		46	3,323
FUS	768	100		768	55,491
USP	40	35		14	1,011
TOTALS	3,516			2,949	213,077

MARKET ADJUSTMENTS

TYPE	MDL	EFF. AREA	TOT ADJ PTS	EFF. BASE RATE	REPL. COST NEW	AYB	EYB	ECON	FNCT		NORM	% COND
0100	01	2,949	99.2512	111.16	327,811	1952	1990	0	0	0	35.00	65.00

1 SINGLE FAM 100% - 2015 Heated Area: 2508 HX Base Yr 2015

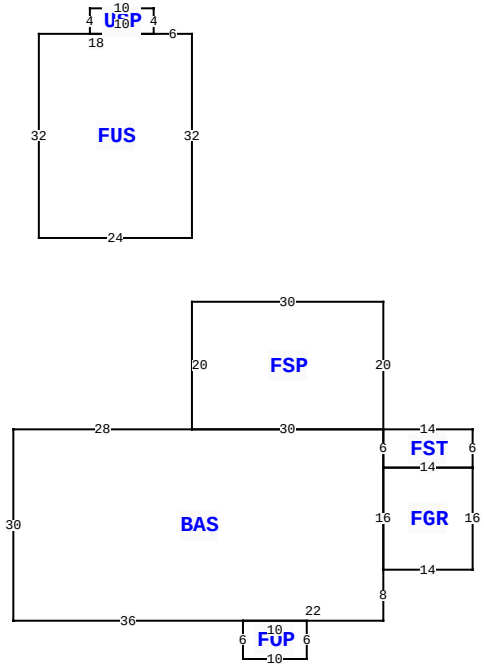

732 SW EL PRADO AVE, LAKE CITY

BLD DATE		LGL DATE	
XF DATE		LAND DATE	04/21/2023 MLU
INC DATE		AG DATE	

VALUATION SUMMARY

VALUATION BY		STANDARD
Tax Group: 1	Tax Dist:	
BUILDING MARKET VALUE		213,077
TOTAL MARKET OB/XF VALUE		400
TOTAL LAND VALUE - MARKET		18,500
TOTAL MARKET VALUE		231,977
SOH/AGL Deduction		89,289
ASSESSED VALUE		142,688
TOTAL EXEMPTION VALUE	HX HB	50,722
BASE TAXABLE VALUE		91,966
TOTAL JUST VALUE		231,977
NCON VALUE		0
INCOME VALUE		
PREVIOUS YEAR MKT VALUE		231,977

PERMIT NUM	DESCRIPTION	AMT	ISSUED
13	MAINT/ALTR	50	01/14/2014

SALES DATA

OFF RECORD Number	DATE	TYPE INST	Q U	V I	RSN CD	SALE PRICE
1273/2546	4/25/2014	WD	Q	I	01	148,000
GRANTOR: NORMAN HEIMS AS TRUST						
GRANTEE: STEPHEN M CHRISTIE						
1267/1638	12/30/2013	WD	U	I	12	64,500
GRANTOR: COLUMBIA BANK						
GRANTEE: NORMAN HEIMS AS TRU						

BUILDING NOTES

BUILDING DIMENSIONS

BAS= W28 S30 E36 FOP= S6 E10N6 W10$ E22 N8 FGR= E14 N16 W14 S 16$ N16 FST= E14 N6 W14S6$ N6 FSP= N20 W30 S20 E30$ W30$ PTR=N30 FUS= N32 W6 USP= N4 W10 S4 E10$ W18 S32 E24$ S30$.

EXTRA FEATURES

LN	OB/XF CODE	DESCRIPTION	BLD	CAP	L	W	UNITS	UT	Adj R	ADJ UNIT PRICE	ORIG COND	YEAR ON	YEAR ACTUAL	Q	% COND	OB/XF MKT VALUE	NOTES
1	0260	PAVEMENT-A	0	100	0	0	1.00	UT	0.00	0.00	100	0	0	3	100	200	
2	0119	MASONRY WA	0	0	0	0	1.00	UT	0.00	0.00	100	2016	2016	3	100	200	

LAND DESCRIPTION

TOTAL OB/XF 400

LN	USE CODE	CLS	LAND USE DESCRIPTION	CAP	RD	LOC ZONE	FRONT	DEPTH	TOT LND UTS	UNIT TYPE	DT	DPTH FACT	% COND	TOT ADJ	UNIT PRICE	ADJ UNIT PRICE	LAND VALUE	OTHER ADJUSTMENTS AND NOTES	YEAR	DENSITY	DECL	FRZ	YR	CONSRV
1	0100	C	SFR	100		RSF-2	0.00	0.00	1.00	LT		1.00	1.00	1.00	18,500.00	18,500.00	18,500							

REVIEW DATE 10/25/2016 BY DF Total Acres: 0.48 Total Land Value: 18,500 Market: 0 Agricultural: 0 Common: 18,500 PRINTED 11/18/2025 BY SYS