S DIV: LOTS 1 & 2 BLOCK 2 LAKE V
BEG NE COR LOT 1 LAKE VILLAS S/D
PRADO ST 5.70 FT, W 210 FT, NW 9

WOLF DAVID L
349 SW MONTGONERY DR
LAKE CITY, FL 32025

2026

00-00-00-13995-000

COLUMBIA COUNTY PROPERTY

BUILDING CHARACTERISTICS

ELEMENT	CD	CONSTRUCTION
Exterior Wall	19	COMMON BRK 100
Roof Structur	03	GABLE/HIP 100
Roof Cover	03	COMP SHNGL 100
Interior Wall	05	DRYWALL 100
Interior Floo	14	CARPET 80
Interior Floo	12	HARDWOOD 20
Air Condition	03	CENTRAL 100
Heating Type	04	AIR DUCTED 100
Bedrooms		4 100
Bathrooms		2.5 100
Frame	01	NONE 100
Stories	1.5	1.5 100
Architectual	05	CONV 100
Units		0 100
Condition Adj	03	03 100
Kitchen Adjus	01	01 100
Quality	05	05
DOR CODE	0100	SINGLE FAMILY
MAP NUM		MKT AREA 06
NEIGHBORHOOD/LOC	32317.140	1.00/

AREA TYPE	TOTAL GROSS AREA	PCT OF BASE	YEAR	TOT ADJ AREA	SUBAREA MARKET VALUE
BAS	1,656	100		1,656	134,442
FBM	700	80		560	45,464
FGR	440	55		242	19,647
FOP	54	30		16	1,299
FSP	500	40		200	16,237
FUS	920	100		920	74,690
TOTALS	4,270			3,594	291,779

MARKET ADJUSTMENTS

TYPE	MDL	EFF. AREA	TOT ADJ PTS	EFF. BASE RATE	REPL. COST NEW	AYB	EYB	ECON	FNCT		NORM	% COND
0100	01	3,594	111.5205	124.90	448,891	1948	1948	0	0	0	35.00	65.00

1 SINGLE FAM 100% - 2020 Heated Area: 3276 HX Base Yr 2020

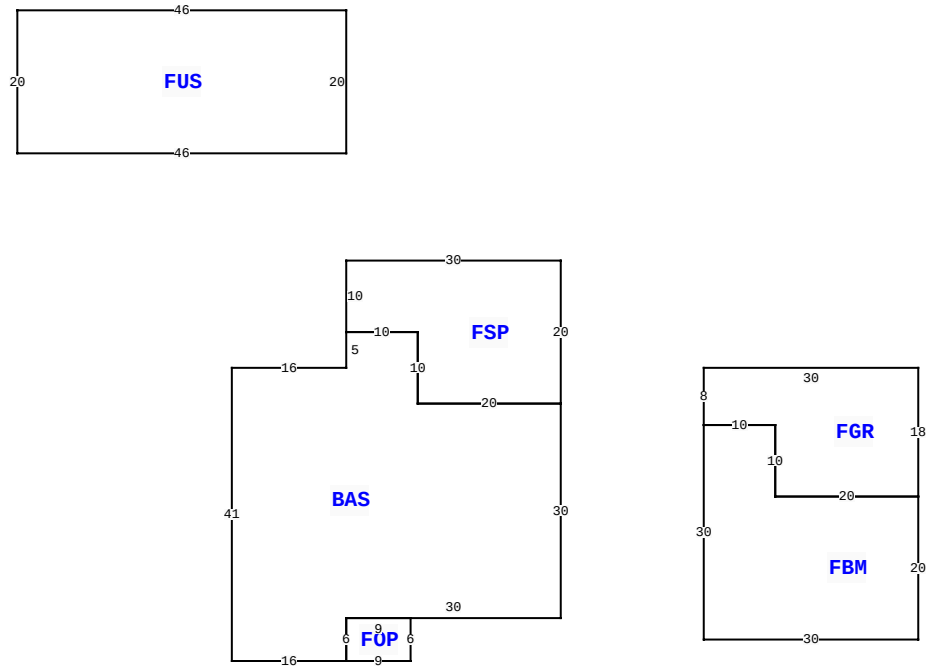

349 SW MONTGOMERY DR, LAKE CITY

BLD DATE		LGL DATE	
XF DATE		LAND DATE	
INC DATE		AG DATE	

VALUATION SUMMARY

VALUATION BY		STANDARD
Tax Group: 1	Tax Dist:	
BUILDING MARKET VALUE		291,779
TOTAL MARKET OB/XF VALUE		3,980
TOTAL LAND VALUE - MARKET		82,875
TOTAL MARKET VALUE		378,634
SOH/AGL Deduction		80,764
ASSESSED VALUE		297,870
TOTAL EXEMPTION VALUE	HX HB	50,722
BASE TAXABLE VALUE		247,148
TOTAL JUST VALUE		378,634
NCON VALUE		0
INCOME VALUE		
PREVIOUS YEAR MKT VALUE		378,634

SALE:1:1: INCUDED PERSONAL PROPERTY

PERMIT NUM	DESCRIPTION	AMT	ISSUED
000048062	Electrical Servic	0	09/08/2023

SALES DATA

OFF RECORD Number	DATE	TYPE INST	Q U /	V I /	RSN CD	SALE PRICE
1385/2173	6/03/2019	WD	Q	I	01	240,000
GRANTOR: GEORGE & CARMEN JACKS						
GRANTEE: DAVID L WOLF						
1239/2106	8/09/2012	WD	U	I	38	175,000
GRANTOR: SAMUEL FORD BREWER &						
GRANTEE: GEORGE & CARMEN JAC						

BUILDING NOTES

BUILDING DIMENSIONS

BAS= W16 S41 E16 FOP= E9 N6 W9 S6$ N6 E30 N30 FSP= N20 W30 S10 E10 S10 E20$ W20 N10 W10 S5$ PTR=N50 FUS= W46 S20 E46 N20$ S50$ PTR=E80 FGR= W30 S8 FBM= S30 E30 N20 W20 N10 W10$ E10 S10E20 N18$ W80$.

EXTRA FEATURES

LN	OB/XF CODE	DESCRIPTION	BLD	CAP	L	W	UNITS	UT	Adj R	ADJ UNIT PRICE	ORIG COND	YEAR ON	YEAR ACTUAL	Q	% COND	OB/XF MKT VALUE	NOTES
1	0260	PAVEMENT-A	0	100	0	0	1.00	UT	0.00	0.00	100	0	0	3	100	1,380	
2	0190	FPLC PF	0	100	0	0	2.00	UT	1,200.00	1,200.00	100	0	0	3	100	2,400	
3	0119	MASONRY WA	0	0	0	0	1.00	UT	0.00	0.00	100	2016	2016	3	100	200	

LAND DESCRIPTION

TOTAL OB/XF 3,980

LN	USE CODE	CLS	LAND USE DESCRIPTION	CAP	RD	LOC ZONE	FRONT	DEPTH	TOT LND UTS	UNIT TYPE	DT	DPTH FACT	% COND	TOT ADJ	UNIT PRICE	ADJ UNIT PRICE	LAND VALUE	OTHER ADJUSTMENTS AND NOTES	YEAR	DENSITY	DECL	FRZ	YR	CONSRV
1	0133	C	SFR LAKE	100		00	0.00	0.00	255.00	FF		1.00	1.00	1.00	325.00	325.00	82,875							

REVIEW DATE 12/02/2024 BY SYS Total Acres: 0.00 Total Land Value: 82,875 Market: 0 Agricultural: 0 Common: 82,875 PRINTED 11/17/2025 BY SYS