COMM SW COR OF E1/2 OF LOT 9 BLO
HEIGHTS S/D, SE ALONG NE R/W BAY
FOR POB, NE 15.62 FT, N 44.69 FT

LYON INVESTMENTS COMPANY LLC
P O BOX 1499
DOUGLAS, GA 31534

**2026**

**00-00-00-13892-000**

## BUILDING CHARACTERISTICS

| ELEMENT | CD | CONSTRUCTION |
|---|---|---|
| Exterior Wall | 19 | COMMON BRK 100 |
| Roof Structur | 09 | RIDGE FRME 100 |
| Roof Cover | 04 | BUILT-UP 100 |
| Interior Wall | 08 | DECORATIVE 100 |
| Interior Floo | 15 | HARDTILE 100 |
| Air Condition | 06 | ENG CENTRL 100 |
| Heating Type | 09 | ENG F AIR 100 |
| Fixtures | | 13 100 |
| Frame | 03 | MASONRY 100 |
| Story Height | | 10 100 |
| RMS | | 6 100 |
| Stories | 1. | 1. 100 |
| Units | | 0 100 |
| Condition Adj | 03 | 03 100 |
| Quality | 08 | 08 |
| DOR CODE | 2100 | RESTAURANT/CAFE |
| MAP NUM | | MKT AREA 06 |
| NEIGHBORHOOD/LOC | 870317.00 | 1.00/ |

| AREA TYPE | TOTAL GROSS AREA | PCT OF BASE | YEAR | TOT ADJ AREA | SUBAREA MARKET VALUE |
|---|---|---|---|---|---|
| BAS | 2,083 | 100 | | 2,083 | 193,209 |
| BAS | 2,132 | 100 | | 2,132 | 197,753 |
| CAN | 40 | 30 | | 12 | 1,113 |
| CAN | 40 | 30 | | 12 | 1,113 |
| TOTALS | 4,295 | | | 4,239 | 393,187 |

## MARKET ADJUSTMENTS

| TYPE | MDL | EFF. AREA | TOT ADJ PTS | EFF. BASE RATE | REPL. COST NEW | AYB | EYB | ECON | FNCT | | NORM | % COND |
|---|---|---|---|---|---|---|---|---|---|---|---|---|
| 5700 | 04 | 4,239 | 150.4768 | 138.44 | 586,847 | 2000 | 2000 | 0 | 0 | 0 | 33.00 | 67.00 |

2 RES F/FOOD 0% - 2024 Heated Area: 4215 HX Base Yr

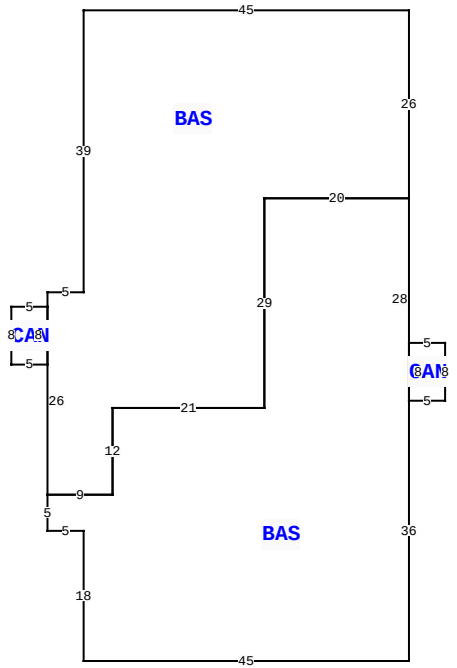


313 SW BAYA DR, LAKE CITY

| | | | |
|---|---|---|---|
| BLD DATE | | LGL DATE | |
| XF DATE | | LAND DATE | 04/09/2024 MLU |
| INC DATE | | AG DATE | |

## EXTRA FEATURES

| LN | OB/XF CODE | DESCRIPTION | BLD | CAP | L | W | UNITS | UT | Adj R | ADJ UNIT PRICE | ORIG COND | YEAR ON | YEAR ACTUAL | Q | % COND | OB/XF MKT VALUE | NOTES |
|---|---|---|---|---|---|---|---|---|---|---|---|---|---|---|---|---|---|
| 1 | 0260 | PAVEMENT-A | 0 | 0 | 0 | 0 | 17,370.00 | UT | 1.10 | 1.10 | 100 | 2000 | 2000 | 3 | 100 | 19,107 | |
| 2 | 0166 | CONC,PAVMT | 0 | 0 | 0 | 0 | 2,414.00 | UT | 1.50 | 1.50 | 100 | 2000 | 2000 | 3 | 100 | 3,621 | |
| 3 | 0253 | LIGHTING | 0 | 0 | 0 | 0 | 4.00 | UT | 800.00 | 800.00 | 100 | 2000 | 2000 | 3 | 100 | 3,200 | |
| 4 | 0253 | LIGHTING | 0 | 0 | 0 | 0 | 2.00 | UT | 1,000.00 | 1,000.00 | 100 | 2000 | 2000 | 3 | 100 | 2,000 | |
| 5 | 0164 | CONC BIN | 0 | 0 | 21 | 10 | 210.00 | UT | 7.50 | 7.50 | 100 | 2000 | 2000 | 3 | 100 | 1,575 | |

## COLUMBIA COUNTY PROPERTY

PAGE 1 of 1 1

### VALUATION SUMMARY

| | |
|---|---|
| VALUATION BY | STANDARD |
| Tax Group: 1 | Tax Dist: |
| BUILDING MARKET VALUE | 393,187 |
| TOTAL MARKET OB/XF VALUE | 29,503 |
| TOTAL LAND VALUE - MARKET | 280,502 |
| TOTAL MARKET VALUE | 703,192 |
| SOH/AGL Deduction | 0 |
| ASSESSED VALUE | 703,192 |
| TOTAL EXEMPTION VALUE | 0 |
| BASE TAXABLE VALUE | 703,192 |
| TOTAL JUST VALUE | 703,192 |
| NCON VALUE | 0 |
| INCOME VALUE | |
| PREVIOUS YEAR MKT VALUE | 714,929 |

LAND:1:1: DOUBLE ACCESS

| PERMIT NUM | DESCRIPTION | AMT | ISSUED |
|---|---|---|---|
| 1724 | COMMERCIAL | 1,212 | 01/19/2000 |
| 1597 | DEMOLISH | 25 | 07/22/1999 |

## SALES DATA

| OFF RECORD Number | DATE | TYPE INST | Q / U | V / I | RSN CD | SALE PRICE |
|---|---|---|---|---|---|---|
| 1498/913 | 8/30/2023 | WD | U | I | 35 | 1,131,700 |
| GRANTOR: HELMS FOOD SERVICE | | | | | | |
| GRANTEE: LYON INVESTMENTS CO | | | | | | |
| 0636/0610 | 10/26/1987 | WD | Q | I | | 81,600 |
| GRANTOR: GOODWIN ETHEL W | | | | | | |
| GRANTEE: WHEELER JOSEPH C & | | | | | | |

## BUILDING NOTES

## BUILDING DIMENSIONS

BAS= N26 W45 S39 W5 S2 CAN= W5 S8 E5 N8$ S26 E9 N12 E21 N29 E20$ BAS= W20 S29 W21 S12 W9 S5 E5 S18 E45 N36 CAN= E5 N8 W5 S8$ N28$.

## LAND DESCRIPTION

TOTAL OB/XF 29,503

| LN | USE CODE | CLS | LAND USE DESCRIPTION | CAP | RD | LOC ZONE | FRONT | DEPTH | TOT LND UTS | UNIT TYPE | DT | DPTH FACT | % COND | TOT ADJ | UNIT PRICE | ADJ UNIT PRICE | LAND VALUE | OTHER ADJUSTMENTS AND NOTES | YEAR | DENSITY | DECL | FRZ | YR | CONSRV |
|---|---|---|---|---|---|---|---|---|---|---|---|---|---|---|---|---|---|---|---|---|---|---|---|---|
| 1 | 2100 | C | RESTAURANT | 0 | | 00 | 0.00 | 0.00 | 38,690.00 | SF | | 1.00 | 1.00 | 1.00 | 7.25 | 7.25 | 280,502 | | | | | | | |

REVIEW DATE 10/12/2023 BY ME Total Acres: 0.89 Total Land Value: 280,502 Market: 0 Agricultural: 0 Common: 280,502 PRINTED 11/05/2025 BY SYS