S DIV: ALL BLOCK 6 ASHURST S/D.
312-48, 363-435, 637-596, 767-11

LAKE CITY PROPERTY HOLDINGS LLC
458 S MARION AVE
LAKE CITY, FL 32025

2026

00-00-00-13855-000

BUILDING CHARACTERISTICS

ELEMENT	CD	CONSTRUCTION
Exterior Wall	26	ALM SIDING 100
Roof Structur	04	WOOD TRUSS 100
Roof Cover	03	COMP SHNGL 100
Interior Wall	04	PLYWOOD 100
Interior Floo	14	CARPET 100
Ceiling	02	F.NOT SUS 100
Air Condition	03	CENTRAL 100
Heating Type	04	AIR DUCTED 100
Fixtures		14 100
Frame	02	WOOD FRAME 100
Story Height		8 100
RMS		23 100
Stories	1.	1. 100
Units		0 100
Condition Adj	03	03 100
Quality	05	05

DOR CODE 7601 MORTUARY/CEMETARY - NON- EX

MAP NUM | MKT AREA 06

NEIGHBORHOOD/LOC 870317.00 1.00/

AREA TYPE	TOTAL GROSS AREA	PCT OF BASE	YEAR	TOT ADJ AREA	SUBAREA MARKET VALUE
BAS	7,341	100		7,341	155,776
CAN	12	30		4	85
CAN	25	30		8	170
CAN	40	30		12	255
CAN	80	30		24	510
CAN	180	30		54	1,146
CAN	315	30		94	1,995
FOP	35	30		10	212
FUS	1,700	100		1,700	36,074
PTO	181	5		9	191
TOTALS	11,196			9,653	204,836

MARKET ADJUSTMENTS

TYPE	MDL	EFF. AREA	TOT ADJ PTS	EFF. BASE RATE	REPL. COST NEW	AYB	EYB	ECON	FNCT		NORM	% COND
6800	04	9,653	78.5862	42.44	409,673	1933	1975	0	0	0	50.00	50.00

1 MORTUARY 0% - 2022 Heated Area: 9041 HX Base Yr

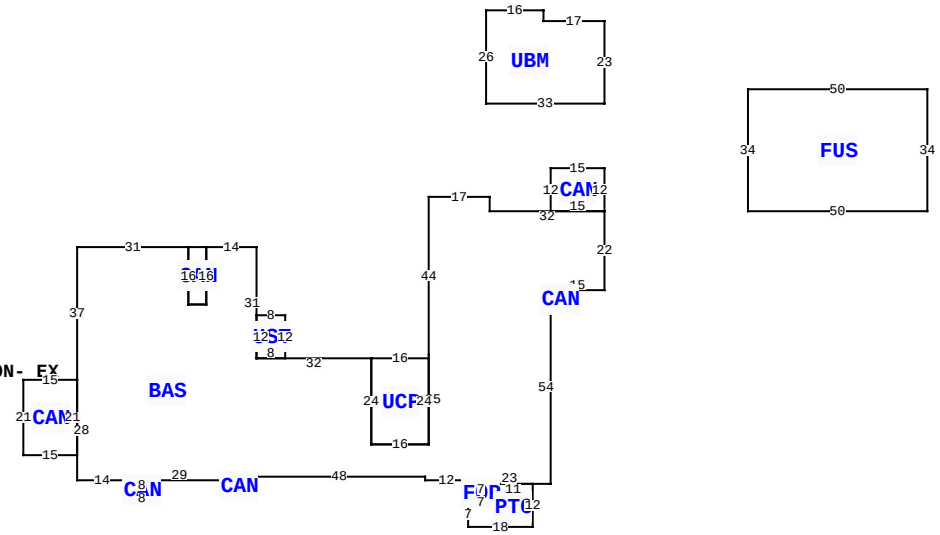

** This building has 13 Sub-Areas

458 S MARION AVE, LAKE CITY

BLD DATE		LGL DATE	
XF DATE		LAND DATE	
INC DATE		AG DATE	

COLUMBIA COUNTY PROPERTY

PAGE 1 of 2 1

VALUATION SUMMARY

VALUATION BY	STANDARD
Tax Group: 1	Tax Dist:
BUILDING MARKET VALUE	278,364
TOTAL MARKET OB/XF VALUE	5,900
TOTAL LAND VALUE - MARKET	117,500
TOTAL MARKET VALUE	401,764
SOH/AGL Deduction	0
ASSESSED VALUE	401,764
TOTAL EXEMPTION VALUE	0
BASE TAXABLE VALUE	401,764
TOTAL JUST VALUE	401,764
NCON VALUE	0
INCOME VALUE	
PREVIOUS YEAR MKT VALUE	401,764

PERMIT NUM	DESCRIPTION	AMT	ISSUED
1095	MAINT/ALTR	278	05/07/2009
2913	REMODEL	225	04/15/2004

SALES DATA

OFF RECORD Number	DATE	TYPE INST	Q U	V I	RSN CD	SALE PRICE
1453/1475	11/23/2021	WD	Q	I	05	710,000
GRANTOR: DEES-PARRISH FAMILY F						
GRANTEE: LAKE CITY PROPERTY						
1108/1033	1/16/2007	WD	Q	I		450,000
GRANTOR: SECURITY TRUST PLANS						
GRANTEE: DEES-PARRISH FAMILY						

BUILDING NOTES

BUILDING DIMENSIONS

CAN= N12 W15 S12 E15$ BAS= W32 N4 W17 S44 S25 W16 N24 UCP= E16 S24 W16 N24$ W32 UST= E8 N12 W8 S12$ N31 W14 S16 W5 N16 CAN= E5 S16 W5 N16$ W31 S37 CAN= W15 S21 E15 N21$ S28 E14 CAN= S5 E8 N5 W8$ E29 CAN= S3 E4 N3 W4$ E6 N1E48 S1 E12 S1 FOP= S5 PTO= S7 E18 N12 W11 S5 W7$ E7 N5 W7$E23 N54 CAN= S5 E5 N5 W5$ E15 N22$ PTR= N30 UBM= W33 N26 E16 S3 E17 S23$ S30$ PTR= E40 FUS= E50 N34 W50 S34$ W40$.

EXTRA FEATURES

LN	OB/XF CODE	DESCRIPTION	BLD	CAP	L	W	UNITS	UT	Adj R	ADJ UNIT PRICE	ORIG COND	YEAR ON	YEAR ACTUAL	Q	% COND	OB/XF MKT VALUE	NOTES
1	0166	CONC,PAVMT	0	0	0	0	1.00	UT	0.00	0.00	100	0	0	3	100	2,300	
2	0260	PAVEMENT-A	0	0	0	0	1.00	UT	0.00	0.00	100	2003	2003	3	100	3,500	
3	0169	FENCE/WOOD	0	0	0	0	1.00	UT	0.00	0.00	100	2016	2016	3	100	100	

LAND DESCRIPTION

TOTAL OB/XF 5,900

LN	USE CODE	CLS	LAND USE DESCRIPTION	CAP	RD	LOC ZONE	FRONT	DEPTH	TOT LND UTS	UNIT TYPE	DT	DPTH FACT	% COND	TOT ADJ	UNIT PRICE	ADJ UNIT PRICE	LAND VALUE	OTHER ADJUSTMENTS AND NOTES	YEAR	DENSITY	DECL	FRZ	YR	CONSRV
1	7600	C	MORTUARY	0		*CG	235.00	200.00	47,000.00	SF		1.00	1.00	1.00	2.50	2.50	117,500							

REVIEW DATE 12/07/2021 BY CP Total Acres: 1.08 Total Land Value: 117,500 Market: 0 Agricultural: 0 Common: 117,500 PRINTED 11/07/2025 BY SYS

S DIV: ALL BLOCK 6 ASHURST S/D.
312-48, 363-435, 637-596, 767-11

LAKE CITY PROPERTY HOLDINGS LLC
458 S MARION AVE
LAKE CITY, FL 32025

2026

00-00-00-13855-000

COLUMBIA COUNTY PROPERTY

BUILDING CHARACTERISTICS

ELEMENT	CD	CONSTRUCTION
Exterior Wall	19	COMMON BRK 100
Roof Structur	04	WOOD TRUSS 100
Roof Cover	03	COMP SHNGL 100
Interior Wall	02	WALL BD/WD 100
Interior Floo	14	CARPET 100
Ceiling	02	F.NOT SUS 100
Air Condition	03	CENTRAL 100
Heating Type	04	AIR DUCTED 100
Fixtures		5 100
Frame	02	WOOD FRAME 100
Story Height		8 100
RMS		2 100
Stories	1.	1. 100
Units		0 100
Condition Adj	03	03 100
Quality	05	05

DOR CODE 7601 MORTUARY/CEMETARY - NON- EX

MAP NUM | MKT AREA 06

NEIGHBORHOOD/LOC 870317.00 1.00/

AREA TYPE	TOTAL GROSS AREA	PCT OF BASE	YEAR	TOT ADJ AREA	SUBAREA MARKET VALUE
BAS	2,944	100		2,944	60,264
CAN	114	30		34	696
CAN	510	30		153	3,132
CAN	1,536	30		461	9,437
TOTALS	5,104			3,592	73,528

MARKET ADJUSTMENTS

TYPE	MDL	EFF. AREA	TOT ADJ PTS	EFF. BASE RATE	REPL. COST NEW	AYB	EYB	ECON	FNCT		NORM	% COND
6800	04	3,592	75.8080	40.94	147,056	1977	1977	0	0	0	50.00	50.00

2 MORTUARY 0% - 2022 Heated Area: 2944 HX Base Yr

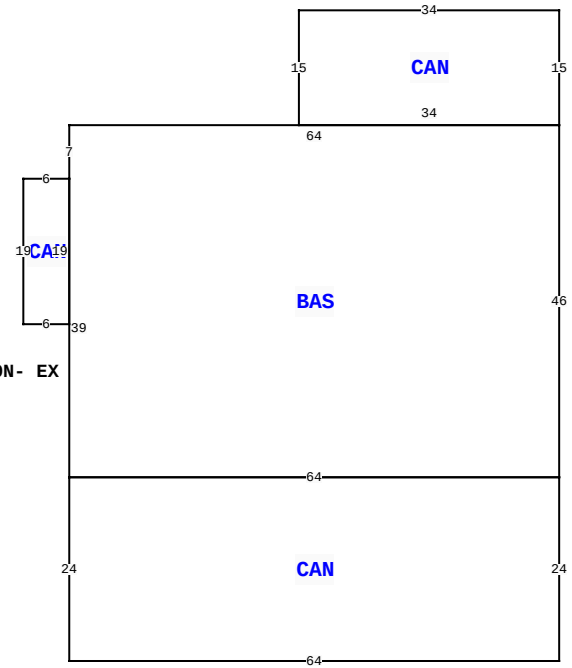

458 S MARION AVE, LAKE CITY

BLD DATE		LGL DATE	
XF DATE		LAND DATE	
INC DATE		AG DATE	

VALUATION SUMMARY

VALUATION BY	STANDARD
Tax Group: 1	Tax Dist:
BUILDING MARKET VALUE	278,364
TOTAL MARKET OB/XF VALUE	5,900
TOTAL LAND VALUE - MARKET	117,500
TOTAL MARKET VALUE	401,764
SOH/AGL Deduction	0
ASSESSED VALUE	401,764
TOTAL EXEMPTION VALUE	0
BASE TAXABLE VALUE	401,764
TOTAL JUST VALUE	401,764
NCON VALUE	0
INCOME VALUE	
PREVIOUS YEAR MKT VALUE	401,764

PERMIT NUM	DESCRIPTION	AMT	ISSUED

SALES DATA

OFF RECORD Number	DATE	TYPE INST	Q U /	V I /	RSN CD	SALE PRICE
1453/1475	11/23/2021	WD	Q	I	05	710,000
GRANTOR: DEES-PARRISH FAMILY F						
GRANTEE: LAKE CITY PROPERTY						
1108/1033	1/16/2007	WD	Q	I		450,000
GRANTOR: SECURITY TRUST PLANS						
GRANTEE: DEES-PARRISH FAMILY						

BUILDING NOTES

BUILDING DIMENSIONS

CAN= N15 W34 S15 E34$ BAS= W64 S7 CAN= W6 S19 E6 N19$ S39
CAN= S24 E64 N24 W64$ E64N46$.

EXTRA FEATURES

LN	OB/XF CODE	DESCRIPTION	BLD	CAP	L	W	UNITS	UT	Adj R	ADJ UNIT PRICE	ORIG COND	YEAR ON	YEAR ACTUAL	Q	% COND	OB/XF MKT VALUE	NOTES

LAND DESCRIPTION

TOTAL OB/XF 0

LN	USE CODE	CLS	LAND USE DESCRIPTION	CAP	RD	LOC ZONE	FRONT	DEPTH	TOT LND UTS	UNIT TYPE	DT	DPTH FACT	% COND	TOT ADJ	UNIT PRICE	ADJ UNIT PRICE	LAND VALUE	OTHER ADJUSTMENTS AND NOTES	YEAR	DENSITY	DECL	FRZ	YR	CONSRV

REVIEW DATE 12/07/2021 BY CP Total Acres: 1.08 Total Land Value: 117,500 Market: 0 Agricultural: 0 Common: 117,500 PRINTED 11/07/2025 BY SYS