S DIV: LOTS 8, 9, 10 & 11 BLOCK RBJ HOLDINGS TRUST

467-792, 742-1166, 742-1167, 790 ,

2026

00-00-00-13831-000

COLUMBIA COUNTY PROPERTY

BUILDING CHARACTERISTICS

ELEMENT	CD	CONSTRUCTION
Exterior Wall	26	ALM SIDING 100
Roof Structur	03	GABLE/HIP 100
Roof Cover	03	COMP SHNGL 100
Interior Wall	05	DRYWALL 100
Interior Floo	09	PINE WOOD 100
Air Condition	03	CENTRAL 100
Heating Type	04	AIR DUCTED 100
Bedrooms		2 100
Bathrooms		1 100
Frame	01	NONE 100
Stories	1.	1. 100
Architectual	05	CONV 100
Units		0 100
Condition Adj	02	02 100
Kitchen Adjus	01	01 100
Quality	05	05
DOR CODE	0100	SINGLE FAMILY
MAP NUM		MKT AREA 06
NEIGHBORHOOD/LOC	870317.00	1.00/

AREA TYPE	TOTAL GROSS AREA	PCT OF BASE	YEAR	TOT ADJ AREA	SUBAREA MARKET VALUE
BAS	1,200	100		1,200	81,767
FCP	198	25		50	3,407
FOP	156	30		47	3,203
FSP	70	40		28	1,908
UOP	60	20		12	818
TOTALS	1,684			1,337	91,103

MARKET ADJUSTMENTS

TYPE	MDL	EFF. AREA	TOT ADJ PTS	EFF. BASE RATE	REPL. COST NEW	AYB	EYB	ECON	FNCT		NORM	% COND
0100	01	1,337	93.6000	104.83	140,158	1925	1925	0	0	0	35.00	65.00

1 SINGLE FAM 0% - 2025 Heated Area: 1200 HX Base Yr

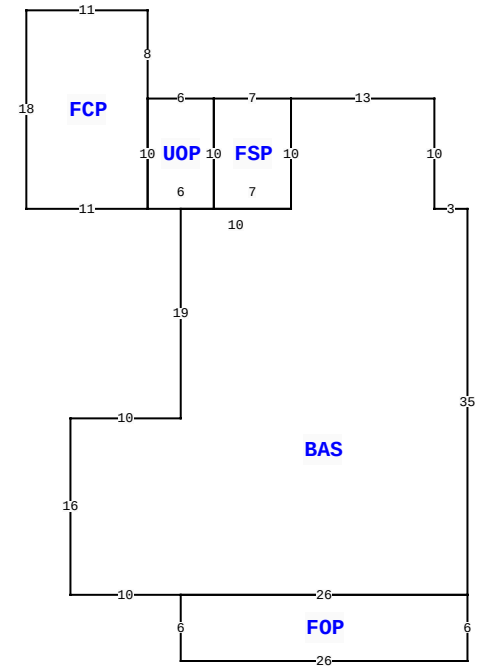

406 SW COLUMBIA AVE, LAKE CITY

BLD DATE		LGL DATE	
XF DATE		LAND DATE	
INC DATE		AG DATE	

VALUATION SUMMARY

VALUATION BY	STANDARD
Tax Group: 1	Tax Dist:
BUILDING MARKET VALUE	91,103
TOTAL MARKET OB/XF VALUE	700
TOTAL LAND VALUE - MARKET	28,350
TOTAL MARKET VALUE	120,153
SOH/AGL Deduction	0
ASSESSED VALUE	120,153
TOTAL EXEMPTION VALUE	0
BASE TAXABLE VALUE	120,153
TOTAL JUST VALUE	120,153
NCON VALUE	0
INCOME VALUE	
PREVIOUS YEAR MKT VALUE	120,153

PERMIT NUM	DESCRIPTION	AMT	ISSUED

SALES DATA

OFF RECORD Number	DATE	TYPE INST	Q U /	V I /	RSN CD	SALE PRICE
1507/376	1/29/2024	QC	U	I	11	100
GRANTOR: COOPER ADRIAN						
GRANTEE: RBJ HOLDINGS TRUST						
1469/2241	2/09/2022	QC	U	I	11	100
GRANTOR: GARRETT MISTY MCDANIE						
GRANTEE: COOPER ADRIAN						

BUILDING NOTES

BUILDING DIMENSIONS

BAS= W13 FSP= W7 UOP= W6 FCP= N8 W11 S18 E11 N10$ S10 E6 N10$ S10 E7 N10$ S10 W10 S19 W10 S16 E10 FOP= S6 E26 N6 W26$ E26 N35 W3 N10$.

EXTRA FEATURES

LN	OB/XF CODE	DESCRIPTION	BLD	CAP	L	W	UNITS	UT	Adj R	ADJ UNIT PRICE	ORIG COND	YEAR ON	YEAR ACTUAL	Q	% COND	OB/XF MKT VALUE	NOTES
1	0031	BARN,MT AE	0	0	0	0	1.00	UT	500.00	500.00	20	0	0	3	20	100	
2	0070	CARPORT UF	0	0	0	0	1.00	UT	0.00	0.00	100	1993	1993	3	100	600	

LAND DESCRIPTION

TOTAL OB/XF 700

LN	USE CODE	CLS	LAND USE DESCRIPTION	CAP	RD	LOC ZONE	FRONT	DEPTH	TOT LND UTS	UNIT TYPE	DT	DPTH FACT	% COND	TOT ADJ	UNIT PRICE	ADJ UNIT PRICE	LAND VALUE	OTHER ADJUSTMENTS AND NOTES	YEAR	DENSITY	DECL	FRZ	YR	CONSRV
1	0100	C	SFR	0		*RO	120.00	105.00	12,600.00	SF		1.00	1.00	1.00	2.25	2.25	28,350							

REVIEW DATE 10/26/2016 BY DF Total Acres: 0.29 Total Land Value: 28,350 Market: 0 Agricultural: 0 Common: 28,350 PRINTED 10/02/2025 BY SYS