S DIV LOTS 3 & 6 BLOCK G CHALKE
R/W.

STARGEL JOHN/STARGEL KELLI
2626 COLLINS AVE
LAKELAND, FL 33803

2026

00-00-00-13817-000

COLUMBIA COUNTY PROPERTY

BUILDING CHARACTERISTICS

ELEMENT	CD	CONSTRUCTION
Exterior Wall	31	VINYL SID 100
Roof Structur	03	GABLE/HIP 100
Roof Cover	03	COMP SHNGL 100
Interior Wall	04	PLYWOOD 50
Interior Wall	05	DRYWALL 50
Interior Floo	09	PINE WOOD 90
Interior Floo	06	VINYL ASB 10
Air Condition	03	CENTRAL 100
Heating Type	04	AIR DUCTED 100
Bedrooms		6 100
Bathrooms		2 100
Frame	01	NONE 100
Stories	2.	2. 100
Architectual	05	CONV 100
Units		0 100
Condition Adj	03	03 100
Kitchen Adjus	01	01 100
Quality	05	05
DOR CODE	0109	SFR/BOARDING HOUSE
MAP NUM		MKT AREA 06
NEIGHBORHOOD/LOC	32317.060	1.00/

AREA TYPE	TOTAL GROSS AREA	PCT OF BASE	YEAR	TOT ADJ AREA	SUBAREA MARKET VALUE
BAS	1,637	100		1,637	81,260
FCP	180	25		45	2,234
FEP	280	80		224	11,119
FUS	1,051	100		1,051	52,171
UOP	60	20		12	596
TOTALS	3,208			2,969	147,380

MARKET ADJUSTMENTS

TYPE	MDL	EFF. AREA	TOT ADJ PTS	EFF. BASE RATE	REPL. COST NEW	AYB	EYB	ECON	FNCT	AP	NORM	% COND
0100	01	2,969	98.4890	110.31	327,510	1900	1900	0	0	20	35.00	45.00

1 SINGLE FAM 0% - 2023 Heated Area: 2688 HX Base Yr

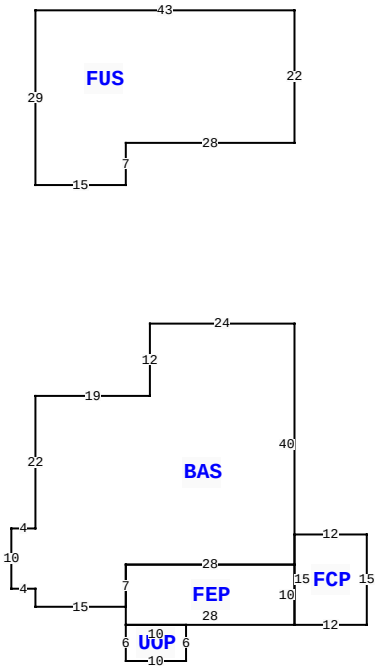

173 SE BAYA DR, LAKE CITY

BLD DATE		LGL DATE	
XF DATE		LAND DATE	
INC DATE		AG DATE	

VALUATION SUMMARY

VALUATION BY	STANDARD
Tax Group: 1	Tax Dist:
BUILDING MARKET VALUE	147,380
TOTAL MARKET OB/XF VALUE	2,250
TOTAL LAND VALUE - MARKET	63,900
TOTAL MARKET VALUE	213,530
SOH/AGL Deduction	0
ASSESSED VALUE	213,530
TOTAL EXEMPTION VALUE	0
BASE TAXABLE VALUE	213,530
TOTAL JUST VALUE	213,530
NCON VALUE	0
INCOME VALUE	
PREVIOUS YEAR MKT VALUE	213,530

PERMIT NUM	DESCRIPTION	AMT	ISSUED

SALES DATA

OFF RECORD Number	DATE	TYPE INST	Q / U	V / I	RSN CD	SALE PRICE
1471/1885	6/30/2022	WD	U	I	37	140,000
GRANTOR: KALB COMMERCIAL PROP						
GRANTEE: STARGEL JOHN						
1147/1721	4/07/2008	WD	Q	I	01	100
GRANTOR: CHARLES H & DEBORAH K						
GRANTEE: KALB COMMERCIAL PRO						

BUILDING NOTES

BUILDING DIMENSIONS

BAS= W24 S12 W19 S22 W4 S10 E4 S3 E15 FEP= S3 UOP= S6 E10 N6 W10$ E28 FCP= E12 N15 W12 S15$ N10 W28 S7$ N7 E28 N40$ PTR=N30 FUS= N22 W43 S29E15 N7 E28 $ S30$.

EXTRA FEATURES

LN	OB/XF CODE	DESCRIPTION	BLD	CAP	L	W	UNITS	UT	Adj R	ADJ UNIT PRICE	ORIG COND	YEAR ON	YEAR ACTUAL	Q	% COND	OB/XF MKT VALUE	NOTES
1	0190	FPLC PF	0	0	0	0	1.00	UT	1,200.00	1,200.00	100	0	0	3	100	1,200	
2	0258	PATIO	0	0	0	0	1.00	UT	0.00	0.00	100	0	0	3	100	550	
3	0169	FENCE/WOOD	0	0	0	0	1.00	UT	0.00	0.00	100	1993	1993	3	100	500	

LAND DESCRIPTION

TOTAL OB/XF 2,250

LN	USE CODE	CLS	LAND USE DESCRIPTION	CAP	RD	LOC ZONE	FRONT	DEPTH	TOT LND UTS	UNIT TYPE	DT	DPTH FACT	% COND	TOT ADJ	UNIT PRICE	ADJ UNIT PRICE	LAND VALUE	OTHER ADJUSTMENTS AND NOTES	YEAR	DENSITY	DECL	FRZ	YR	CONSRV
1	0100	C	SFR	0		*RO	0.00	0.00	17,040.00	SF		1.00	1.00	1.00	3.75	3.75	63,900							

REVIEW DATE 08/17/2022 BY ME Total Acres: 0.39 Total Land Value: 63,900 Market: 0 Agricultural: 0 Common: 63,900 PRINTED 11/19/2025 BY SYS