S DIV: ALL LOT 1 EX E 90 FT & AL
CHALKERS S/D.

SUMNER CHARYL
1468 SW MAIN BLVD STE 105 #71
LAKE CITY, FL 32025

2026

00-00-00-13788-000

COLUMBIA COUNTY PROPERTY

BUILDING CHARACTERISTICS

ELEMENT	CD	CONSTRUCTION
Exterior Wall	31	VINYL SID 80
Exterior Wall	04	SINGLE SID 20
Roof Structur	03	GABLE/HIP 100
Roof Cover	01	MINIMUM 100
Interior Wall	05	DRYWALL 100
Interior Floo	14	CARPET 90
Interior Floo	06	VINYL ASB 10
Air Condition	03	CENTRAL 100
Heating Type	04	AIR DUCTED 100
Bedrooms		5 100
Bathrooms		3 100
Frame		N/A 100
Stories	1.5	1.5 100
Architectual	05	CONV 100
Units		0 100
Condition Adj	01	01 100
Kitchen Adjus	01	01 100
Quality	04	04
DOR CODE	0100	SINGLE FAMILY
MAP NUM		MKT AREA 06
NEIGHBORHOOD/LOC	32317.060	1.00/

AREA TYPE	TOTAL GROSS AREA	PCT OF BASE	YEAR	TOT ADJ AREA	SUBAREA MARKET VALUE
BAS	1,833	100		1,833	74,682
FOP	85	30		26	1,059
FOP	432	30		130	5,297
FUS	1,020	100		1,020	41,558
UGR	400	45		180	7,334
UST	100	45		45	1,833
TOTALS	3,870			3,234	131,763

MARKET ADJUSTMENTS

TYPE	MDL	EFF. AREA	TOT ADJ PTS	EFF. BASE RATE	REPL. COST NEW	AYB	EYB	ECON	FNCT	AP	NORM	% COND
0100	01	3,234	80.8374	90.54	292,806	1900	1960	0	0	20	35.00	45.00

1 SINGLE FAM 0% - 2023 Heated Area: 2853 HX Base Yr

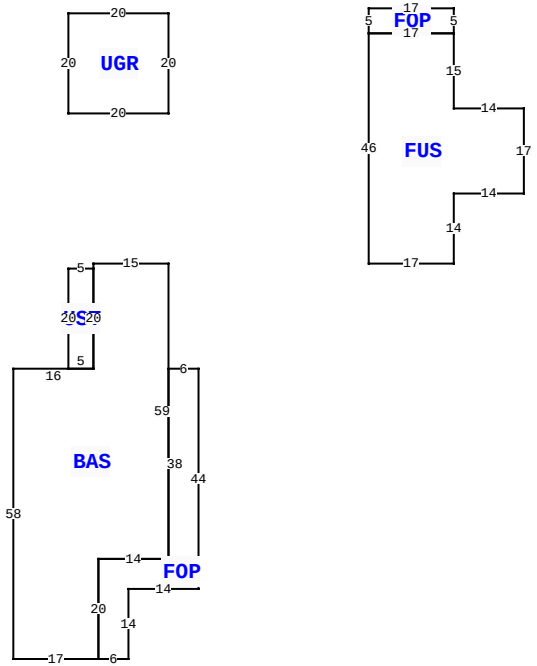

127 SE CAMP ST, LAKE CITY

BLD DATE		LGL DATE	
XF DATE		LAND DATE	
INC DATE		AG DATE	

VALUATION SUMMARY

VALUATION BY	STANDARD
Tax Group: 1	Tax Dist:
BUILDING MARKET VALUE	154,155
TOTAL MARKET OB/XF VALUE	250
TOTAL LAND VALUE - MARKET	19,250
TOTAL MARKET VALUE	173,655
SOH/AGL Deduction	0
ASSESSED VALUE	173,655
TOTAL EXEMPTION VALUE	0
BASE TAXABLE VALUE	173,655
TOTAL JUST VALUE	173,655
NCON VALUE	0
INCOME VALUE	
PREVIOUS YEAR MKT VALUE	173,655

LAND:2:1: APT RENTED - SECOND FLOOR

PERMIT NUM	DESCRIPTION	AMT	ISSUED

SALES DATA

OFF RECORD Number	DATE	TYPE INST	Q U	V I	RSN CD	SALE PRICE
1466/2689	5/16/2022	WD	Q	I	01	135,000
GRANTOR: CROSS ROSEMARY GRAY						
GRANTEE: SUMNER CHARYL						
1291/2673	3/28/2015	QC	U	I	11	100
GRANTOR: LORENE F GRAY						
GRANTEE: ROSEMARY GRAY CROSS						

BUILDING NOTES

BUILDING DIMENSIONS

BAS= W15 S1 UST= W5 S20 E5 N20$S20W16 S58 E17 FOP= E6 N14 E14 N44 W6 S38 W14 S20$ N20 E14 N59$ PTR=E40 FUS= E17 N14 E14 N17 W14 N15 FOP= N5 W17 S5 E17$ W17 S46 $ W40$ PTR= N30 UGR= N20 W20 S20 E20$ S30$.

EXTRA FEATURES

LN	OB/XF CODE	DESCRIPTION	BLD	CAP	L	W	UNITS	UT	Adj R	ADJ UNIT PRICE	ORIG COND	YEAR ON	YEAR ACTUAL	Q	% COND	OB/XF MKT VALUE	NOTES
1	0166	CONC,PAVMT	0	0	0	0	1.00	UT	0.00	0.00	100	0	0	3	100	250	

LAND DESCRIPTION

TOTAL OB/XF 250

LN	USE CODE	CLS	LAND USE DESCRIPTION	CAP	RD	LOC ZONE	FRONT	DEPTH	TOT LND UTS	UNIT TYPE	DT	DPTH FACT	% COND	TOT ADJ	UNIT PRICE	ADJ UNIT PRICE	LAND VALUE	OTHER ADJUSTMENTS AND NOTES	YEAR	DENSITY	DECL	FRZ	YR	CONSRV
1	0100	C	SFR	0		*CG	55.00	140.00	7,100.00	SF		1.00	1.00	1.00	2.50	2.50	17,750							
2	0100	C	SFR	0		00	0.00	0.00	600.00	SF		1.00	1.00	1.00	2.50	2.50	1,500							

REVIEW DATE 10/26/2016 BY DF Total Acres: 0.18 Total Land Value: 19,250 Market: 0 Agricultural: 0 Common: 19,250 PRINTED 11/18/2025 BY SYS

S DIV: ALL LOT 1 EX E 90 FT & AL
CHALKERS S/D.

SUMNER CHARYL
1468 SW MAIN BLVD STE 105 #71
LAKE CITY, FL 32025

2026

00-00-00-13788-000

COLUMBIA COUNTY PROPERTY

BUILDING CHARACTERISTICS

ELEMENT	CD	CONSTRUCTION
Exterior Wall	15	CONC BLOCK 100
Roof Structur	03	GABLE/HIP 100
Roof Cover	12	MODULAR MT 100
Interior Wall	05	DRYWALL 100
Interior Floo	06	VINYL ASB 100
Air Condition		N/A 100
Heating Type	02	CONVECTION 100
Bedrooms		1 100
Bathrooms		1 100
Frame	01	NONE 100
Stories	2.	2. 100
Architectual	05	CONV 100
Units		0 100
Condition Adj	01	01 100
Kitchen Adjus	01	01 100
Quality	03	03
DOR CODE	0100	SINGLE FAMILY
MAP NUM		MKT AREA 06
NEIGHBORHOOD/LOC	32317.060	1.00/

AREA TYPE	TOTAL GROSS AREA	PCT OF BASE	YEAR	TOT ADJ AREA	SUBAREA MARKET VALUE
BAS	480	100		480	20,356
FSP	120	40		48	2,036
TOTALS	600			528	22,392

MARKET ADJUSTMENTS

TYPE	MDL	EFF. AREA	TOT ADJ PTS	EFF. BASE RATE	REPL. COST NEW	AYB	EYB	ECON	FNCT	AP	NORM	% COND
0100	01	528	84.1428	94.24	49,759	1945	1945	0	0	20	35.00	45.00

2 SINGLE FAM 0% - 2023 Heated Area: 480 HX Base Yr

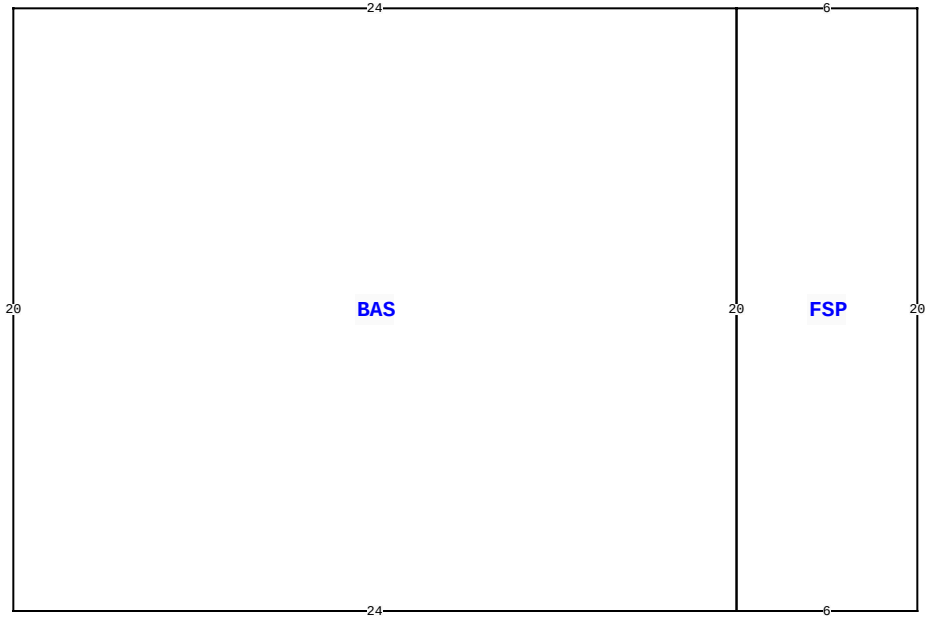

127 SE CAMP ST, LAKE CITY

BLD DATE		LGL DATE	
XF DATE		LAND DATE	
INC DATE		AG DATE	

VALUATION SUMMARY

VALUATION BY	STANDARD
Tax Group: 1	Tax Dist:
BUILDING MARKET VALUE	154,155
TOTAL MARKET OB/XF VALUE	250
TOTAL LAND VALUE - MARKET	19,250
TOTAL MARKET VALUE	173,655
SOH/AGL Deduction	0
ASSESSED VALUE	173,655
TOTAL EXEMPTION VALUE	0
BASE TAXABLE VALUE	173,655
TOTAL JUST VALUE	173,655
NCON VALUE	0
INCOME VALUE	
PREVIOUS YEAR MKT VALUE	173,655

PERMIT NUM	DESCRIPTION	AMT	ISSUED

SALES DATA

OFF RECORD Number	DATE	TYPE INST	Q U	V I	RSN CD	SALE PRICE
1466/2689	5/16/2022	WD	Q	I	01	135,000
GRANTOR: CROSS ROSEMARY GRAY						
GRANTEE: SUMNER CHARYL						
1291/2673	3/28/2015	QC	U	I	11	100
GRANTOR: LORENE F GRAY						
GRANTEE: ROSEMARY GRAY CROSS						

BUILDING NOTES

BUILDING DIMENSIONS

BAS= W24 S20 E24 N20$ FSP= S20 E6 N20 W6$.

EXTRA FEATURES

L N	OB/XF CODE	DESCRIPTION	BLD	CAP	L	W	UNITS	UT	Adj R	ADJ UNIT PRICE	ORIG COND	YEAR ON	YEAR ACTUAL	Q	% COND	OB/XF MKT VALUE	NOTES

LAND DESCRIPTION

TOTAL OB/XF 0

L N	USE CODE	CLS	LAND USE DESCRIPTION	CAP	R D	LOC ZONE	FRONT	DEPTH	TOT LND UTS	UNIT TYPE	D T	DPTH FACT	% COND	TOT ADJ	UNIT PRICE	ADJ UNIT PRICE	LAND VALUE	OTHER ADJUSTMENTS AND NOTES	YEAR	DENSITY	DECL	FRZ	YR	CONSRV

REVIEW DATE 10/26/2016 BY DF Total Acres: 0.18 Total Land Value: 19,250 Market: 0 Agricultural: 0 Common: 19,250 PRINTED 11/18/2025 BY SYS