S DIV: LOTS 87 & 92 BLOCK H CANO
OF PARK AVE LYING E OF LOTS 87 &
AVE NOW VACATED IN CITY ORD #200

SANCHEZ-BIANCHI JAMIE W
322 SE CAMP ST
LAKE CITY, FL 32025

2026

00-00-00-13728-000

BUILDING CHARACTERISTICS

ELEMENT	CD	CONSTRUCTION
Exterior Wall	03	BELOW AVG. 100
Roof Structur	03	GABLE/HIP 100
Roof Cover	06	ASB SHINGL 100
Interior Wall	03	PLASTER 100
Interior Floo	09	PINE WOOD 70
Interior Floo	14	CARPET 30
Air Condition	03	CENTRAL 100
Heating Type	04	AIR DUCTED 100
Bedrooms		4 100
Bathrooms		2 100
Frame	01	NONE 100
Stories	1.5	1.5 100
Architectual	05	CONV 100
Units		0 100
Condition Adj	03	03 100
Kitchen Adjus	01	01 100
Quality	05	05
DOR CODE	0100	SINGLE FAMILY
MAP NUM		MKT AREA 06
NEIGHBORHOOD/LOC	870317.00	1.00/

AREA TYPE	TOTAL GROSS AREA	PCT OF BASE	YEAR	TOT ADJ AREA	SUBAREA MARKET VALUE
BAS	2,088	100		2,088	136,399
FSP	72	40		29	1,895
FSP	390	40		156	10,191
FUS	900	100		900	58,793
TOTALS	3,450			3,173	207,276

MARKET ADJUSTMENTS

TYPE	MDL	EFF. AREA	TOT ADJ PTS	EFF. BASE RATE	REPL. COST NEW	AYB	EYB	ECON	FNCT		NORM	% COND
0100	01	3,173	89.7298	100.50	318,886	1900	1900	0	0	0	35.00	65.00

1 SINGLE FAM 100% - 2024 Heated Area: 2988 HX Base Yr 2024

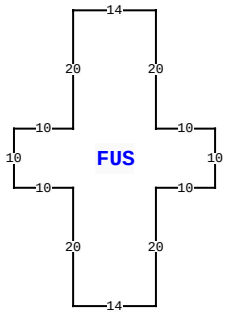

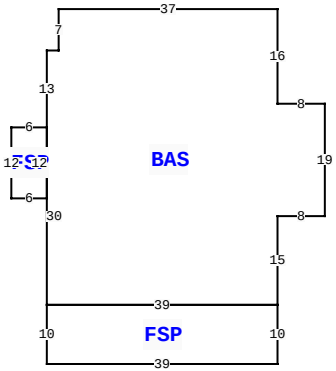

322 SE CAMP ST, LAKE CITY

BLD DATE		LGL DATE	
XF DATE		LAND DATE	
INC DATE		AG DATE	

COLUMBIA COUNTY PROPERTY

PAGE 1 of 1 1

VALUATION SUMMARY

VALUATION BY		STANDARD
Tax Group: 1	Tax Dist:	
BUILDING MARKET VALUE		207,276
TOTAL MARKET OB/XF VALUE		400
TOTAL LAND VALUE - MARKET		7,200
TOTAL MARKET VALUE		214,876
SOH/AGL Deduction		11,649
ASSESSED VALUE		203,227
TOTAL EXEMPTION VALUE	HX HB	50,722
BASE TAXABLE VALUE		152,505
TOTAL JUST VALUE		214,876
NCON VALUE		0
INCOME VALUE		
PREVIOUS YEAR MKT VALUE		214,876

PERMIT NUM	DESCRIPTION	AMT	ISSUED
000046878	Roof Replacement	18,853	03/31/2023

SALES DATA

OFF RECORD Number	DATE	TYPE INST	Q U	V I	RSN CD	SALE PRICE
1488/1560	4/13/2023	QC	U	I	11	100
GRANTOR: SANCHEZ YOLANDA						
GRANTEE: SANCHEZ-BIANCHI JAM						
1171/0312	4/13/2009	WD	U	I	11	100
GRANTOR: JOHN E SANCHEZ BIANCH						
GRANTEE: YOLANDA SANCHEZ						

BUILDING NOTES

BUILDING DIMENSIONS

BAS= W37 S7 W2 S13 FSP= W6 S12 E6 N12$ S30 FSP= S10 E39N10 W39$ E39 N15 E8 N19 W8 N16$ PTR= E40 FUS= E14 N20 E10 N10 W10 N20 W14 S20 W10 S10 E10 S20$ W40$.

EXTRA FEATURES

LN	OB/XF CODE	DESCRIPTION	BLD	CAP	L	W	UNITS	UT	Adj R	ADJ UNIT PRICE	ORIG COND	YEAR ON	YEAR ACTUAL	Q	% COND	OB/XF MKT VALUE	NOTES
1	0210	GARAGE U	0	100	18	31	1.00	UT	0.00	0.00	100	0	0	3	100	350	
2	0252	LEAN-TO W/	0	100	0	0	1.00	UT	0.00	0.00	100	2011	2011	3	100	50	

LAND DESCRIPTION

TOTAL OB/XF 400

LN	USE CODE	CLS	LAND USE DESCRIPTION	CAP	RD	LOC ZONE	FRONT	DEPTH	TOT LND UTS	UNIT TYPE	DT	DPTH FACT	% COND	TOT ADJ	UNIT PRICE	ADJ UNIT PRICE	LAND VALUE	OTHER ADJUSTMENTS AND NOTES	YEAR	DENSITY	DECL	FRZ	YR	CONSRV
1	0100	C	SFR	100		00	0.00	0.00	19,200.00	SF		1.00	1.00	0.50	0.75	0.38	7,200							

REVIEW DATE 05/22/2023 BY jerry Total Acres: 0.44 Total Land Value: 7,200 Market: 0 Agricultural: 0 Common: 7,200 PRINTED 10/24/2025 BY SYS