S DIV: LOTS 14 & 15 BLOCK C CANO
302.

COURSON JERRY W/COURSON TARA O
P O BOX 966
LAKE CITY, FL 32056

2025

00-00-00-13702-000

COLUMBIA COUNTY PROPERTY

BUILDING CHARACTERISTICS

ELEMENT	CD	CONSTRUCTION
Exterior Wall	04	SINGLE SID 100
Roof Structur	03	GABLE/HIP 100
Roof Cover	03	COMP SHNGL 100
Interior Wall	04	PLYWOOD 50
Interior Wall	05	DRYWALL 50
Interior Floo	09	PINE WOOD 100
Air Condition	02	WINDOW 100
Heating Type	02	CONVECTION 100
Bedrooms		2 100
Bathrooms		1 100
Frame	01	NONE 100
Stories	1.	1. 100
Architectual	05	CONV 100
Units		2 100
Condition Adj	01	01 100
Kitchen Adjus	01	01 100
Quality	04	04
DOR CODE	0100	SINGLE FAMILY
MAP NUM		MKT AREA 06
NEIGHBORHOOD/LOC	870317.00	1.00/

AREA TYPE	TOTAL GROSS AREA	PCT OF BASE	YEAR	TOT ADJ AREA	SUBAREA MARKET VALUE
BAS	80	100		80	3,253
BAS	332	100		332	13,501
BAS	1,396	100		1,396	56,767
FOP	126	30		38	1,545
FSP	120	40		48	1,952
UDG	572	55		315	12,809
TOTALS	2,626			2,209	89,827

MARKET ADJUSTMENTS

TYPE	MDL	EFF. AREA	TOT ADJ PTS	EFF. BASE RATE	REPL. COST NEW	AYB	EYB	ECON	FNCT		NORM	% COND
0100	01	2,209	55.8600	62.56	138,195	1947	1947	0	0	0	35.00	65.00

1 SINGLE FAM 0% - 0 Heated Area: 1808 HX Base Yr

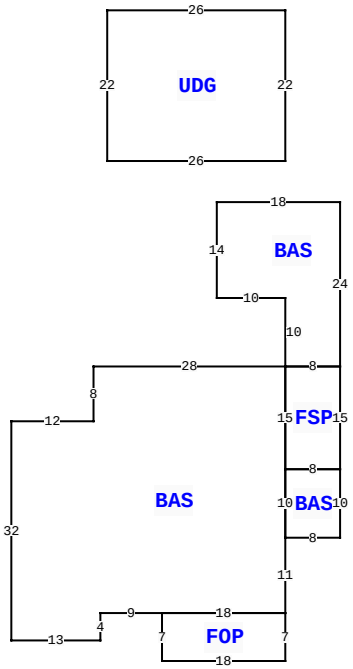

378 SE MCCRAY AVE, LAKE CITY

BLD DATE		LGL DATE	
XF DATE		LAND DATE	
INC DATE		AG DATE	

VALUATION SUMMARY

VALUATION BY	STANDARD
Tax Group: 1	Tax Dist:
BUILDING MARKET VALUE	89,827
TOTAL MARKET OB/XF VALUE	100
TOTAL LAND VALUE - MARKET	9,450
TOTAL MARKET VALUE	99,377
SOH/AGL Deduction	2,859
ASSESSED VALUE	96,518
TOTAL EXEMPTION VALUE	0
BASE TAXABLE VALUE	96,518
TOTAL JUST VALUE	99,377
NCON VALUE	0
INCOME VALUE	
PREVIOUS YEAR MKT VALUE	93,763

PERMIT NUM	DESCRIPTION	AMT	ISSUED

SALES DATA

OFF RECORD Number	DATE	TYPE INST	Q U	V I	RSN CD	SALE PRICE
1275/1240	6/02/2014	WD	U	I	12	19,900
GRANTOR: FEDERAL NATIONAL MORT						
GRANTEE: JERRY W & TARA O CO						
1271/1163	3/05/2014	CT	U	I	18	0
GRANTOR: CLERK OF COURT (ROBER						
GRANTEE: FEDERAL NATIONAL MO						

BUILDING NOTES

BUILDING DIMENSIONS

BAS= W28 S8 W12 S32 E13 N4 E9FOP= S7 E18 N7 W18$ E18 N11 BAS= E8 N10 W8 S10$ N10 FSP= E8 N15 W8 S15$ N15$ BAS= E8 N24 W18 S14 E10 S10 $PTR=N30 UDG= N22 W26 S22 E26$ S30$.

EXTRA FEATURES

LN	OB/XF CODE	DESCRIPTION	BLD	CAP	L	W	UNITS	UT	Adj R	ADJ UNIT PRICE	ORIG COND	YEAR ON	YEAR ACTUAL	Q	% COND	OB/XF MKT VALUE	NOTES
1	0169	FENCE/WOOD	0	0	0	0	1.00	UT	0.00	0.00	100	2011	2011	3	100	100	

LAND DESCRIPTION

TOTAL OB/XF 100

LN	USE CODE	CLS	LAND USE DESCRIPTION	CAP	RD	LOC ZONE	FRONT	DEPTH	TOT LND UTS	UNIT TYPE	DT	DPTH FACT	% COND	TOT ADJ	UNIT PRICE	ADJ UNIT PRICE	LAND VALUE	OTHER ADJUSTMENTS AND NOTES	YEAR	DENSITY	DECL	FRZ	YR	CONSRV
1	0100	C	SFR	0		A-1	120.00	105.00	12,600.00	SF		1.00	1.00	1.00	0.75	0.75	9,450							

REVIEW DATE 10/11/2016 BY DF Total Acres: 0.29 Total Land Value: 9,450 Market: 0 Agricultural: 0 Common: 9,450 PRINTED 08/26/2025 BY SYS