S DIV: LOTS 1 & 2 BLOCK B CANOVA
PB 1248-2480, DC 1266-2748, QC 1

MORRIS REISE A
359 SE CHURCH AVE
LAKE CITY, FL 32025

2026

00-00-00-13699-000

COLUMBIA COUNTY PROPERTY

BUILDING CHARACTERISTICS

ELEMENT	CD	CONSTRUCTION
Exterior Wall	03	BELOW AVG. 90
Exterior Wall	31	VINYL SID 10
Roof Structur	03	GABLE/HIP 100
Roof Cover	03	COMP SHNGL 100
Interior Wall	05	DRYWALL 100
Interior Floo	14	CARPET 90
Interior Floo	06	VINYL ASB 10
Air Condition	03	CENTRAL 100
Heating Type	04	AIR DUCTED 100
Bedrooms		3 100
Bathrooms		3 100
Frame	01	NONE 100
Stories	1.5	1.5 100
Architectual	05	CONV 100
Units		0 100
Condition Adj	02	02 100
Kitchen Adjus	01	01 100
Quality	05	05
DOR CODE	0100	SINGLE FAMILY
MAP NUM		MKT AREA 06
NEIGHBORHOOD/LOC	870317.00	1.00/

AREA TYPE	TOTAL GROSS AREA	PCT OF BASE	YEAR	TOT ADJ AREA	SUBAREA MARKET VALUE
BAS	2,136	100		2,136	133,869
FOP	28	30		8	501
UCP	352	20		70	4,387
UST	144	45		65	4,074
UST	154	45		69	4,324
UST	660	45		297	18,614
TOTALS	3,474			2,645	165,770

MARKET ADJUSTMENTS

TYPE	MDL	EFF. AREA	TOT ADJ PTS	EFF. BASE RATE	REPL. COST NEW	AYB	EYB	ECON	FNCT		NORM	% COND
0100	01	2,645	86.0933	96.42	255,031	1945	1950	0	0	0	35.00	65.00

1 SINGLE FAM 100% - 2019 Heated Area: 2136 HX Base Yr 2019

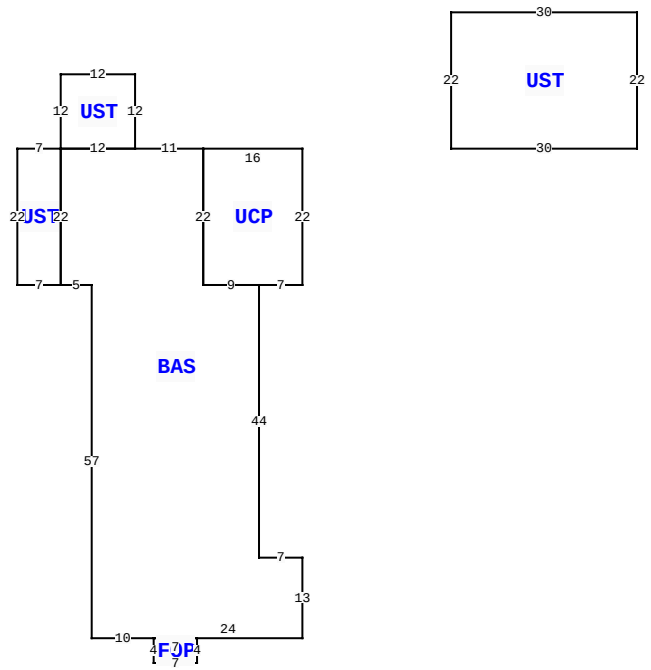

359 SE CHURCH AVE, LAKE CITY

BLD DATE		LGL DATE	
XF DATE		LAND DATE	
INC DATE		AG DATE	

VALUATION SUMMARY

VALUATION BY		STANDARD
Tax Group: 1	Tax Dist:	
BUILDING MARKET VALUE		165,770
TOTAL MARKET OB/XF VALUE		300
TOTAL LAND VALUE - MARKET		10,817
TOTAL MARKET VALUE		176,887
SOH/AGL Deduction		58,649
ASSESSED VALUE		118,238
TOTAL EXEMPTION VALUE	HX HB	50,722
BASE TAXABLE VALUE		67,516
TOTAL JUST VALUE		176,887
NCON VALUE		0
INCOME VALUE		
PREVIOUS YEAR MKT VALUE		176,887

PERMIT NUM	DESCRIPTION	AMT	ISSUED
000044773	Roof Replacement	33,506	06/23/2022

SALES DATA

OFF RECORD Number	DATE	TYPE INST	Q U	V I	RSN CD	SALE PRICE
1356/1921	3/27/2018	WD	U	I	12	111,000
GRANTOR: SUNSTATE FEDERAL CRED						
GRANTEE: REISE A MORRIS						
1313/0751	4/04/2016	QC	U	I	11	100
GRANTOR: BEVERLY F KAHLICH (A						
GRANTEE: SUNSTATE FEDERAL CR						

BUILDING NOTES

BUILDING DIMENSIONS

BAS= W11 UST= N12 W12 S12 E12$ W12 UST= W7 S22 E7 N22$S22 E5 S57 E10 FOP= S4 E7 N4W7$ E24 N13 W7 N44 UCP= E7 N22 W16 S22 E9$ W9 N22$ PTR= E40 UST= E30 N22 W30 S22$ W40$.

EXTRA FEATURES

LN	OB/XF CODE	DESCRIPTION	BLD	CAP	L	W	UNITS	UT	Adj R	ADJ UNIT PRICE	ORIG COND	YEAR ON	YEAR ACTUAL	Q	% COND	OB/XF MKT VALUE	NOTES
1	0294	SHED WOOD/	0	100	0	0	1.00	UT	0.00	0.00	100	2011	2011	3	100	200	
2	0252	LEAN-TO W/	0	100	0	0	1.00	UT	0.00	0.00	100	2011	2011	3	100	100	

LAND DESCRIPTION

TOTAL OB/XF 300

LN	USE CODE	CLS	LAND USE DESCRIPTION	CAP	RD	LOC ZONE	FRONT	DEPTH	TOT LND UTS	UNIT TYPE	DT	DPTH FACT	% COND	TOT ADJ	UNIT PRICE	ADJ UNIT PRICE	LAND VALUE	OTHER ADJUSTMENTS AND NOTES	YEAR	DENSITY	DECL	FRZ	YR	CONSRV
1	0100	C	SFR	100		RSF-	1168.00	101.00	16,968.00	SF		1.00	1.00	0.85	0.75	0.64	10,817							

REVIEW DATE 10/11/2016 BY DF Total Acres: 0.39 Total Land Value: 10,817 Market: 0 Agricultural: 0 Common: 10,817 PRINTED 11/06/2025 BY SYS