S DIV: LOT 2 EX N 55 FT & ALL LO
CREWS ADDITION.

MOSES LINDA M/MOSES TIMOTHY J
689 SE CAMP ST
LAKE CITY, FL 32025-6096

2026

00-00-00-13579-000

COLUMBIA COUNTY PROPERTY

BUILDING CHARACTERISTICS

ELEMENT	CD	CONSTRUCTION
Exterior Wall	17	MSNRY STUC 100
Roof Structur	03	GABLE/HIP 100
Roof Cover	03	COMP SHNGL 100
Interior Wall	04	PLYWOOD 100
Interior Floo	14	CARPET 90
Interior Floo	08	SHT VINYL 10
Air Condition	03	CENTRAL 100
Heating Type	04	AIR DUCTED 100
Bedrooms		3 100
Bathrooms		2 100
Frame	01	NONE 100
Stories	1.	1. 100
Architectual	05	CONV 100
Units		0 100
Condition Adj	01	01 100
Kitchen Adjus	01	01 100
Quality	03	03

DOR CODE	0100	SINGLE FAMILY
MAP NUM		MKT AREA 06
NEIGHBORHOOD/LOC	870317.00	1.00/

AREA TYPE	TOTAL GROSS AREA	PCT OF BASE	YEAR	TOT ADJ AREA	SUBAREA MARKET VALUE
BAS	2,190	100		2,190	120,030
FCP	312	25		78	4,275
FOP	8	30		2	110
PTO	381	5		19	1,041
TOTALS	2,891			2,289	125,455

MARKET ADJUSTMENTS

TYPE	MDL	EFF. AREA	TOT ADJ PTS	EFF. BASE RATE	REPL. COST NEW	AYB	EYB	ECON	FNCT		NORM	% COND
0100	01	2,289	75.2875	84.32	193,008	1950	1950	0	0	0	35.00	65.00

1 SINGLE FAM 100% - 2008 Heated Area: 2190 HX Base Yr 2008

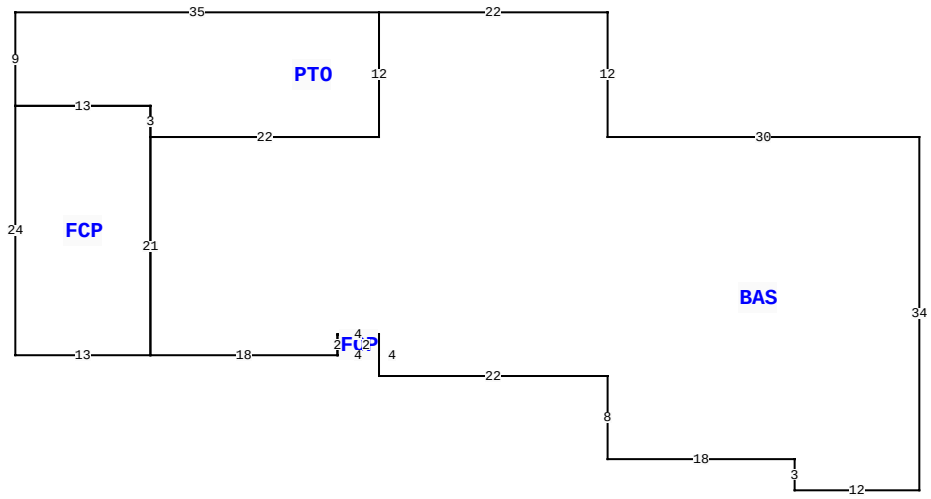

689 SE CAMP ST, LAKE CITY

BLD DATE		LGL DATE	
XF DATE		LAND DATE	04/27/2022 MLU
INC DATE		AG DATE	

VALUATION SUMMARY

VALUATION BY		STANDARD
Tax Group: 1	Tax Dist:	
BUILDING MARKET VALUE		125,455
TOTAL MARKET OB/XF VALUE		300
TOTAL LAND VALUE - MARKET		16,646
TOTAL MARKET VALUE		142,401
SOH/AGL Deduction		87,131
ASSESSED VALUE		55,270
TOTAL EXEMPTION VALUE	HX HB	30,270
BASE TAXABLE VALUE		25,000
TOTAL JUST VALUE		142,401
NCON VALUE		0
INCOME VALUE		
PREVIOUS YEAR MKT VALUE		142,401

PERMIT NUM	DESCRIPTION	AMT	ISSUED

SALES DATA

OFF RECORD Number	DATE	TYPE INST	Q / U	V / I	RSN CD	SALE PRICE
1153/1428	6/24/2008	WD	Q	I	01	100

GRANTOR: LINDA & TIMOTHY MOSES
GRANTEE: LINDA MOSES (LIFE E

BUILDING NOTES

BUILDING DIMENSIONS

BAS= W30 N12 W22 PTO= W35 S9 E13 S3 E22 N12$ S12 W22 FCP= N3 W13 S24 E13 N21$ S21E18 FOP= E4 N2 W4 S2$ N2 E4 S4 E22 S8 E18 S3 E12 N34$.

EXTRA FEATURES

LN	OB/XF CODE	DESCRIPTION	BLD	CAP	L	W	UNITS	UT	Adj R	ADJ UNIT PRICE	ORIG COND	YEAR ON	YEAR ACTUAL	Q	% COND	OB/XF MKT VALUE	NOTES
1	0166	CONC,PAVMT	0	100	0	0	1.00	UT	0.00	0.00	100	0	0	3	100	300	

LAND DESCRIPTION

TOTAL OB/XF 300

LN	USE CODE	CLS	LAND USE DESCRIPTION	CAP	RD	LOC ZONE	FRONT	DEPTH	TOT LND UTS	UNIT TYPE	DT	DPTH FACT	% COND	TOT ADJ	UNIT PRICE	ADJ UNIT PRICE	LAND VALUE	OTHER ADJUSTMENTS AND NOTES	YEAR	DENSITY	DECL	FRZ	YR	CONSRV
1	0100	C	SFR	100		RSF-1	0.00	0.00	20,614.00	SF		1.00	1.00	0.85	0.95	0.81	16,646							

REVIEW DATE 10/12/2016 BY DF Total Acres: 0.47 Total Land Value: 16,646 Market: 0 Agricultural: 0 Common: 16,646 PRINTED 11/19/2025 BY SYS