E DIV: LOTS 2 & 11 BLOCK 7 GELBE
OF BLOCKS 6, 7, 8 & 9 OAK PARK S

WALTERS JILL R
632 SE MONROE ST
LAKE CITY, FL 32025

2026

00-00-00-13430-000

COLUMBIA COUNTY PROPERTY

BUILDING CHARACTERISTICS

ELEMENT	CD	CONSTRUCTION
Exterior Wall	03	BELOW AVG. 100
Roof Structur	03	GABLE/HIP 100
Roof Cover	12	MODULAR MT 90
Roof Cover	03	COMP SHNGL 10
Interior Wall	05	DRYWALL 100
Interior Floo	14	CARPET 100
Air Condition	02	WINDOW 100
Heating Type	03	FORCED AIR 100
Bedrooms		3 100
Bathrooms		2 100
Frame	01	NONE 100
Stories	1.	1. 100
Architectual	05	CONV 100
Units		0 100
Condition Adj	03	03 100
Kitchen Adjus	01	01 100
Quality	05	05
DOR CODE	0100	SINGLE FAMILY
MAP NUM		MKT AREA 06
NEIGHBORHOOD/LOC	860317.00	1.00/

AREA TYPE	TOTAL GROSS AREA	PCT OF BASE	YEAR	TOT ADJ AREA	SUBAREA MARKET VALUE
BAS	1,238	100		1,238	80,953
FCP	335	25		84	5,493
FEP	260	80		208	13,601
FEP	416	80		333	21,775
FOP	72	30		22	1,438
FSP	10	40		4	261
UST	220	45		99	6,473
TOTALS	2,551			1,988	129,995

MARKET ADJUSTMENTS

TYPE	MDL	EFF. AREA	TOT ADJ PTS	EFF. BASE RATE	REPL. COST NEW	AYB	EYB	ECON	FNCT		NORM	% COND
0100	01	1,988	89.8220	100.60	199,993	1945	1945	0	0	0	35.00	65.00

1 SINGLE FAM 100% - 2021 Heated Area: 1238 HX Base Yr 2021

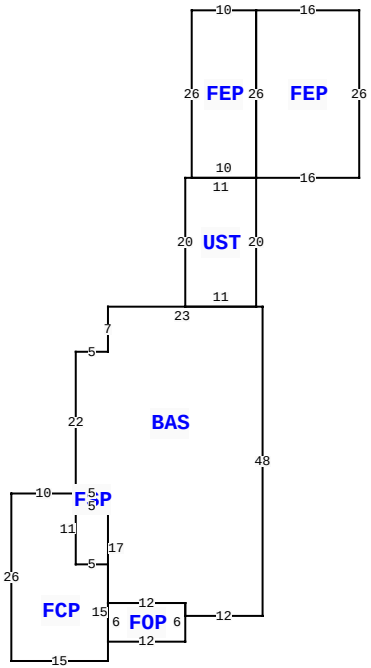

632 SE MONROE ST, LAKE CITY

BLD DATE		LGL DATE	
XF DATE		LAND DATE	04/27/2022 MLU
INC DATE		AG DATE	

VALUATION SUMMARY

VALUATION BY		STANDARD
Tax Group: 1	Tax Dist:	
BUILDING MARKET VALUE		129,995
TOTAL MARKET OB/XF VALUE		1,250
TOTAL LAND VALUE - MARKET		10,830
TOTAL MARKET VALUE		142,075
SOH/AGL Deduction		99,419
ASSESSED VALUE		42,656
TOTAL EXEMPTION VALUE	HX HB SX	42,656
BASE TAXABLE VALUE		0
TOTAL JUST VALUE		142,075
NCON VALUE		0
INCOME VALUE		
PREVIOUS YEAR MKT VALUE		142,075

PERMIT NUM	DESCRIPTION	AMT	ISSUED

SALES DATA

OFF RECORD Number	DATE	TYPE INST	Q U	V I	RSN CD	SALE PRICE
1408/2192	3/09/2020	WD	U	I	12	56,000
GRANTOR: JP MORGAN CHASE BANK						
GRANTEE: JILL R WALTERS						
1398/1279	11/05/2019	CT	U	I	18	100
GRANTOR: CLERK OF COURT (LOTA						
GRANTEE: JPMORGAN CHASE BANK						

BUILDING NOTES

BUILDING DIMENSIONS

BAS= W1 UST= N20 FEP= E16 N26 W16 FEP= W10 S26 E10 N26$ S26$ W11 S20 E11$ W23 S7 W5 S22 FCP= W10 S26 E15 N15 W5 N11$ FSP= S2 E5 N2 W5$ E5 S17 FOP= S6E12 N6 W12$ E12 S2 E12 N48$.

EXTRA FEATURES

LN	OB/XF CODE	DESCRIPTION	BLD	CAP	L	W	UNITS	UT	Adj R	ADJ UNIT PRICE	ORIG COND	YEAR ON	YEAR ACTUAL	Q	% COND	OB/XF MKT VALUE	NOTES
1	0166	CONC,PAVMT	0	100	0	0	1.00	UT	0.00	0.00	100	1993	1993	3	100	50	
2	0296	SHED METAL	0	100	0	0	1.00	UT	0.00	0.00	100	2011	2011	3	100	800	
3	0130	CLFENCE 5	0	100	0	0	1.00	UT	0.00	0.00	100	2011	2011	3	100	400	

LAND DESCRIPTION

TOTAL OB/XF 1,250

LN	USE CODE	CLS	LAND USE DESCRIPTION	CAP	RD	LOC ZONE	FRONT	DEPTH	TOT LND UTS	UNIT TYPE	DT	DPTH FACT	% COND	TOT ADJ	UNIT PRICE	ADJ UNIT PRICE	LAND VALUE	OTHER ADJUSTMENTS AND NOTES	YEAR	DENSITY	DECL	FRZ	YR	CONSRV
1	0100	C	SFR	100		*RSF	-357.00	200.00	11,400.00	SF		1.00	1.00	1.00	0.95	0.95	10,830							

REVIEW DATE 10/17/2016 BY DF Total Acres: 0.26 Total Land Value: 10,830 Market: 0 Agricultural: 0 Common: 10,830 PRINTED 11/19/2025 BY SYS