E DIV: BEG SE COR BLOCK 287, RUN
420 FT, S 106.66 FT, E 420 FT TO
COR BLOCK 287, RUN N ALONG W R/W

BELK JAMES HERSCHEL/BELK PAMELA HADLEY
115 CATAWBA COVE LN
BELMONT, NC 28012

2026

00-00-00-13313-000

COLUMBIA COUNTY PROPERTY

BUILDING CHARACTERISTICS

ELEMENT	CD	CONSTRUCTION
Exterior Wall	05	AVERAGE 100
Roof Structur	08	IRREGULAR 100
Roof Cover	14	PREFIN MT 100
Interior Wall	05	DRYWALL 100
Interior Floo	15	HARDTILE 100
Air Condition	03	CENTRAL 100
Heating Type	04	AIR DUCTED 100
Bedrooms		3 100
Bathrooms		3 100
Frame	01	NONE 100
Stories	1.5	1.5 100
Architectual	05	CONV 100
Units		0 100
Condition Adj	03	03 100
Kitchen Adjus	01	01 100
Quality	05	05
DOR CODE	0100	SINGLE FAMILY
MAP NUM		MKT AREA 06
NEIGHBORHOOD/LOC	32317.080	1.00/

AREA TYPE	TOTAL GROSS AREA	PCT OF BASE	YEAR	TOT ADJ AREA	SUBAREA MARKET VALUE
BAS	384	100		384	36,245
BAS	992	100		992	93,631
FOP	112	30		34	3,209
FUS	936	100		936	88,346
PTO	448	5		22	2,077
UCP	441	20		88	8,306
UOP	64	20		13	1,227
UST	63	45		28	2,643
TOTALS	3,440			2,497	235,683

MARKET ADJUSTMENTS

TYPE	MDL	EFF. AREA	TOT ADJ PTS	EFF. BASE RATE	REPL. COST NEW	AYB	EYB	ECON	FNCT		NORM	% COND
0100	01	2,497	129.6540	145.21	362,589	1949	1985	0	0	0	35.00	65.00

1 SINGLE FAM 0% - 0 Heated Area: 2312 HX Base Yr

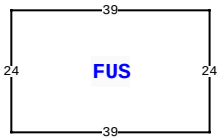

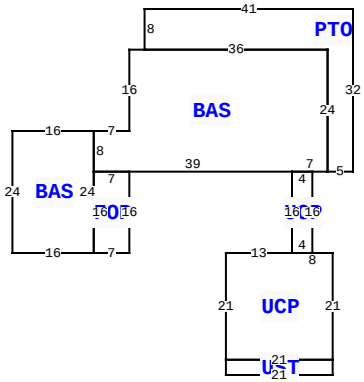

300 SE CHURCH AVE, LAKE CITY

BLD DATE		LGL DATE	
XF DATE		LAND DATE	
INC DATE		AG DATE	

COLUMBIA COUNTY PROPERTY — VALUATION SUMMARY

VALUATION BY	STANDARD
Tax Group: 1	Tax Dist:
BUILDING MARKET VALUE	235,683
TOTAL MARKET OB/XF VALUE	23,600
TOTAL LAND VALUE - MARKET	49,607
TOTAL MARKET VALUE	308,890
SOH/AGL Deduction	0
ASSESSED VALUE	308,890
TOTAL EXEMPTION VALUE	0
BASE TAXABLE VALUE	308,890
TOTAL JUST VALUE	308,890
NCON VALUE	0
INCOME VALUE	
PREVIOUS YEAR MKT VALUE	308,890

PERMIT NUM	DESCRIPTION	AMT	ISSUED
415	SFR	0	08/01/2018
365	MAINT/ALTR	0	06/15/2015
3930	POOL	140	10/03/2006

SALES DATA

OFF RECORD Number	DATE	TYPE INST	Q U	V I	RSN CD	SALE PRICE
1381/2022	4/01/2019	WD	U	I	11	100
GRANTOR: PAMELA BELK						
GRANTEE: PAMELA BELK & JAMES						
1380/0041	3/08/2019	WD	U	I	37	85,000
GRANTOR: MAVIS R GEORGALIS						
GRANTEE: PAMELA BELK						

BUILDING NOTES

BUILDING DIMENSIONS

BAS= W3 S16 W7 BAS= W16 S24 E16 N24$S8 FOP= S16 E7 N16 W7$ E39 UOP= S16 UCP= W13 S21 UST= S3 E21 N3 W21$ E21 N21 W8$ E4 N16 W4$ E7 PTO= E5 N32 W41 S8 E36 S24$ N24 W36$ PTR=N40 FUS= N24 W39 S24 E39$ S40$.

EXTRA FEATURES

LN	OB/XF CODE	DESCRIPTION	BLD	CAP	L	W	UNITS	UT	Adj R	ADJ UNIT PRICE	ORIG COND	YEAR ON	YEAR ACTUAL	Q	% COND	OB/XF MKT VALUE	NOTES
1	0260	PAVEMENT-A	0	0	0	0	1.00	UT	0.00	0.00	100	0	0	3	100	450	
2	0170	FPLC 2STRY	0	0	0	0	1.00	UT	2,750.00	2,750.00	100	0	0	3	100	2,750	
3	0258	PATIO	0	0	0	0	1.00	UT	0.00	0.00	100	0	0	3	100	200	
4	0169	FENCE/WOOD	0	0	0	0	1.00	UT	0.00	0.00	100	2006	2006	3	100	1,028	
5	0166	CONC,PAVMT	0	0	4	100	400.00	UT	3.00	3.00	100	2006	2006	3	100	1,200	
6	0280	POOL R/CON	0	0	16	30	480.00	UT	70.00	70.00	30	2006	2006	3	30	10,080	
7	0169	FENCE/WOOD	0	0	0	0	1.00	UT	0.00	0.00	100	2006	2006	3	100	700	
8	0296	SHED METAL	0	0	12	24	288.00	UT	9.00	9.00	100	2015	2015	3	100	2,592	
9	0262	PRCH,FOP	0	0	10	24	240.00	UT	10.00	10.00	100	2015	2015	3	100	2,400	
10	0296	SHED METAL	0	0	0	0	1.00	UT	0.00	0.00	100	2016	2016	3	100	2,200	

TOTAL OB/XF 23,600

LAND DESCRIPTION

LN	USE CODE	CLS	LAND USE DESCRIPTION	CAP	RD	LOC ZONE	FRONT	DEPTH	TOT LND UTS	UNIT TYPE	DT	DPTH FACT	% COND	TOT ADJ	UNIT PRICE	ADJ UNIT PRICE	LAND VALUE	OTHER ADJUSTMENTS AND NOTES	YEAR	DENSITY	DECL	FRZ	YR	CONSRV
1	0133	C	SFR LAKE	0		*RSF-3	0.00	0.00	19,325.00	SF		1.00	1.00	0.50	1.75	0.88	16,909							
2	9520	C	LAKE	0		00	0.00	0.00	1.00	LT		1.00	1.00	1.00	25.00	25.00	25							
3	0133	C	SFR LAKE	0		*RSF-3	0.00	0.00	10,190.00	SF		1.00	1.00	0.40	1.75	0.70	7,133							
4	9520	C	LAKE	0		00	0.00	0.00	1.00	LT		1.00	1.00	1.00	25.00	25.00	25							
5	0700	C	MISC RES	0		*RSF-3	0.00	0.00	36,450.00	SF		1.00	1.00	0.40	1.75	0.70	25,515							

REVIEW DATE 11/19/2019 BY HC Total Acres: 2.35 Total Land Value: 49,607 Market: 0 Agricultural: 0 Common: 49,607 PRINTED 09/23/2025 BY SYS