E DIV: COMM SW COR, RUN E 119.42
RUN N 76 FT, W 10 FT, N 76 FT TO
DR, NE ALONG R/W 85 FT, S 179.50

PIERCE JOHN M
202 SW AURORA WAY
LAKE CITY, FL 32025

2026

00-00-00-13206-000

COLUMBIA COUNTY PROPERTY

BUILDING CHARACTERISTICS

ELEMENT	CD	CONSTRUCTION
Exterior Wall	17	MSNRY STUC 100
Roof Structur	03	GABLE/HIP 100
Roof Cover	03	COMP SHNGL 100
Interior Wall	03	PLASTER 50
Interior Wall	04	PLYWOOD 50
Interior Floo	12	HARDWOOD 70
Interior Floo	14	CARPET 30
Air Condition	08	ENG SPLIT 100
Heating Type	04	AIR DUCTED 100
Bedrooms		2 100
Bathrooms		1 100
Frame	03	MASONRY 100
Story Height		0 100
RMS		0 100
Stories	3.	3. 100
Units		6 100
Condition Adj	03	03 100
Kitchen Adjus	01	01 100
Quality	05	05
DOR CODE	0800	MULTI-FAM <10
MAP NUM		MKT AREA 06
NEIGHBORHOOD/LOC	860317.00	1.00/

AREA TYPE	TOTAL GROSS AREA	PCT OF BASE	YEAR	TOT ADJ AREA	SUBAREA MARKET VALUE
BAS	806	100		806	30,955
BAS	1,638	100		1,638	62,908
FOP	136	30		41	1,575
FOP	272	30		82	3,149
FOP	272	30		82	3,149
FUS	1,638	100		1,638	62,908
HXB	832	100		832	31,953
HXP	136	30		41	1,575
UOP	175	20		35	1,344
UOP	175	20		35	1,344
TOTALS	6,458			5,400	207,387

MARKET ADJUSTMENTS

TYPE	MDL	EFF. AREA	TOT ADJ PTS	EFF. BASE RATE	REPL. COST NEW	AYB	EYB	ECON	FNCT		NORM	% COND
2300	03	5,400	114.6480	76.81	414,774	1945	1950	0	0	0	50.00	50.00

1 M/FAM HGH 0% - 2025 Heated Area: 4914 HX Base Yr

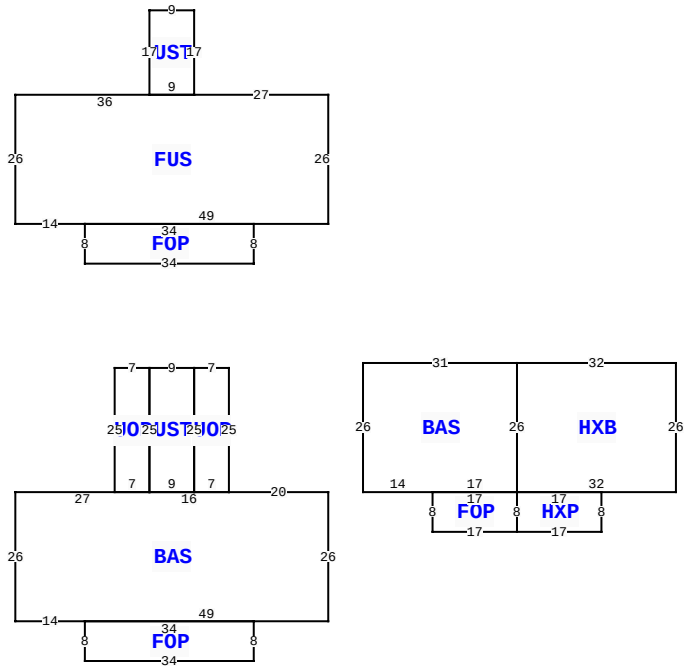

** This building has 12 Sub-Areas

323 E DUVAL ST, LAKE CITY

BLD DATE		LGL DATE	
XF DATE		LAND DATE	
INC DATE		AG DATE	

VALUATION SUMMARY

VALUATION BY	STANDARD
Tax Group: 1	Tax Dist:
BUILDING MARKET VALUE	207,387
TOTAL MARKET OB/XF VALUE	300
TOTAL LAND VALUE - MARKET	35,096
TOTAL MARKET VALUE	242,783
SOH/AGL Deduction	0
ASSESSED VALUE	242,783
TOTAL EXEMPTION VALUE	0
BASE TAXABLE VALUE	242,783
TOTAL JUST VALUE	242,783
NCON VALUE	0
INCOME VALUE	
PREVIOUS YEAR MKT VALUE	242,783

PERMIT NUM	DESCRIPTION	AMT	ISSUED
551	ADDN SFR	50	02/21/2008

SALES DATA

OFF RECORD Number	DATE	TYPE INST	Q U	V I	RSN CD	SALE PRICE
0775/0935	6/01/1993	WD	Q	I		120,000
GRANTOR: JAMES W PENNY						
GRANTEE: JOHN M PIERCE						
0610/0200	12/01/1986	WD	Q	I		95,000
GRANTOR:						
GRANTEE:						

BUILDING NOTES

BUILDING DIMENSIONS

BAS= W20 UOP= N25 W7 S25 E7$W16UST= E9 N25 W9 S25$ UOP= N25 W7 S25 E7$ W27 S26 E14 FOP= S8 E34 N8 W34$ E49 N26$ PTR=N80 FUS= W27 UST= N17 W9 S17 E9$ W36 S26 E14 FOP= S8E34 N8 W34$ E49 N26$ S80$ PTR= E70 HXB= N26 W32 BAS= W31 S26 E14 FOP= S8 E17 N8 W17$ E17 N26 $ S26 HXP= S8 E17N8 W17$ E32$ W70$.

EXTRA FEATURES

LN	OB/XF CODE	DESCRIPTION	BLD	CAP	L	W	UNITS	UT	Adj R	ADJ UNIT PRICE	ORIG COND	YEAR ON	YEAR ACTUAL	Q	% COND	OB/XF MKT VALUE	NOTES
1	0166	CONC,PAVMT	0	0	0	0	1.00	UT	0.00	0.00	100	1993	1993	3	100	300	

LAND DESCRIPTION

TOTAL OB/XF 300

LN	USE CODE	CLS	LAND USE DESCRIPTION	CAP	RD	LOC ZONE	FRONT	DEPTH	TOT LND UTS	UNIT TYPE	DT	DPTH FACT	% COND	TOT ADJ	UNIT PRICE	ADJ UNIT PRICE	LAND VALUE	OTHER ADJUSTMENTS AND NOTES	YEAR	DENSITY	DECL	FRZ	YR	CONSRV
1	0800	C	MULTI-FAM	0		*CG	71.00	160.00	2,836.00	SF		1.00	1.00	1.00	3.00	3.00	8,508							
2	0800	C	MULTI-FAM	0		00	0.00	0.00	8,508.00	SF		1.00	1.00	1.25	2.50	3.13	26,588							

REVIEW DATE 10/21/2016 BY DF Total Acres: 0.26 Total Land Value: 35,096 Market: 0 Agricultural: 0 Common: 35,096 PRINTED 11/17/2025 BY SYS