E DIV: LOT 3 BLOCK 1 MURRAYS SUB
817-002, WD 1049-1431, WD 1073-4

LAND JESSICA
653 SW CHOCTAW AVE
FORT WHITE, FL 32038

2026

00-00-00-12927-000

COLUMBIA COUNTY PROPERTY

BUILDING CHARACTERISTICS

ELEMENT	CD	CONSTRUCTION
Exterior Wall	31	VINYL SID 90
Exterior Wall	05	AVERAGE 10
Roof Structur	03	GABLE/HIP 100
Roof Cover	03	COMP SHNGL 100
Interior Wall	05	DRYWALL 100
Interior Floo	06	VINYL ASB 100
Air Condition	03	CENTRAL 100
Heating Type	04	AIR DUCTED 100
Bedrooms		3 100
Bathrooms		1 100
Frame	01	NONE 100
Stories	1.	1. 100
Architectual	05	CONV 100
Units		0 100
Condition Adj	02	02 100
Kitchen Adjus	01	01 100
Quality	03	03
DOR CODE	0100	SINGLE FAMILY
MAP NUM		MKT AREA 07
NEIGHBORHOOD/LOC	860317.00	1.00/

AREA TYPE	TOTAL GROSS AREA	PCT OF BASE	YEAR	TOT ADJ AREA	SUBAREA MARKET VALUE
BAS	200	100		200	11,898
BAS	1,136	100		1,136	67,579
UST	504	45		227	13,504
TOTALS	1,840			1,563	92,980

MARKET ADJUSTMENTS

TYPE	MDL	EFF. AREA	TOT ADJ PTS	EFF. BASE RATE	REPL. COST NEW	AYB	EYB	ECON	FNCT		NORM	% COND
0100	01	1,563	81.7112	91.52	143,046	1924	1924	0	0	0	35.00	65.00

1 SINGLE FAM 0% - 2025 Heated Area: 1336 HX Base Yr

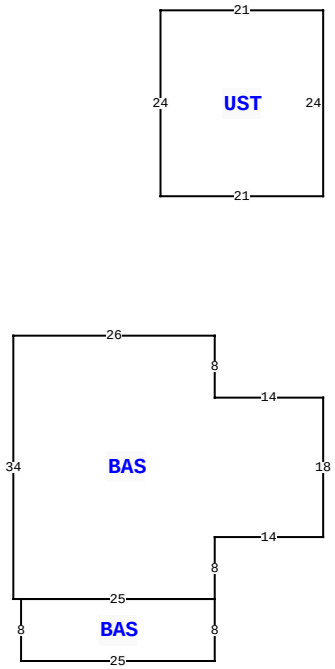

937 SE SAINT JOHNS ST, LAKE CITY

BLD DATE		LGL DATE	
XF DATE		LAND DATE	04/27/2022 MLU
INC DATE		AG DATE	

VALUATION SUMMARY

VALUATION BY	STANDARD
Tax Group: 1	Tax Dist:
BUILDING MARKET VALUE	92,980
TOTAL MARKET OB/XF VALUE	1,100
TOTAL LAND VALUE - MARKET	9,302
TOTAL MARKET VALUE	103,382
SOH/AGL Deduction	0
ASSESSED VALUE	103,382
TOTAL EXEMPTION VALUE	0
BASE TAXABLE VALUE	103,382
TOTAL JUST VALUE	103,382
NCON VALUE	0
INCOME VALUE	
PREVIOUS YEAR MKT VALUE	103,382

PERMIT NUM	DESCRIPTION	AMT	ISSUED

SALES DATA

OFF RECORD Number	DATE	TYPE INST	Q U	V I	RSN CD	SALE PRICE
1510/610	2/12/2024	WD	U	I	11	100
GRANTOR: HEIMS NORMAN						
GRANTEE: LAND JESSICA						
1073/0443	2/03/2006	WD	Q	I		55,000
GRANTOR: JOSEPH AND MARY ANN P						
GRANTEE: NORMAN AND RUTH ANN						

BUILDING NOTES

BUILDING DIMENSIONS

BAS= W14 N8 W26 S34 E1 BAS= S8 E25 N8 W25$ E25 N8 E14 N18$ PTR=N50 UST= W21 S24 E21 N24$ S50$.

EXTRA FEATURES

LN	OB/XF CODE	DESCRIPTION	BLD	CAP	L	W	UNITS	UT	Adj R	ADJ UNIT PRICE	ORIG COND	YEAR ON	YEAR ACTUAL	Q	% COND	OB/XF MKT VALUE	NOTES
1	0120	CLFENCE 4	0	0	0	0	1.00	UT	0.00	0.00	100	2012	2012	3	100	300	
2	0294	SHED WOOD/	0	0	0	0	1.00	UT	0.00	0.00	100	2012	2012	3	100	200	
3	0081	DECKING WI	0	0	0	0	1.00	UT	0.00	0.00	100	2012	2012	3	100	500	
4	0252	LEAN-TO W/	0	0	0	0	1.00	UT	0.00	0.00	100	2017	2017	3	100	100	

LAND DESCRIPTION

TOTAL OB/XF 1,100

LN	USE CODE	CLS	LAND USE DESCRIPTION	CAP	RD	LOC ZONE	FRONT	DEPTH	TOT LND UTS	UNIT TYPE	DT	DPTH FACT	% COND	TOT ADJ	UNIT PRICE	ADJ UNIT PRICE	LAND VALUE	OTHER ADJUSTMENTS AND NOTES	YEAR	DENSITY	DECL	FRZ	YR	CONSRV
1	0100	C	SFR	0		*RSF	-390.00	128.00	11,520.00	SF		1.00	1.00	0.85	0.95	0.81	9,302							

REVIEW DATE 12/05/2016 BY DF Total Acres: 0.26 Total Land Value: 9,302 Market: 0 Agricultural: 0 Common: 9,302 PRINTED 10/08/2025 BY SYS