C DIV: NE1/4 BLOCK 55. EX S 10 F
783-1248, 975-1880, WD 1005-2491

PARK YONG AM/PARK EVA
132 SE MEANS ST
LAKE CITY, FL 32025

2026

00-00-00-12804-000

COLUMBIA COUNTY PROPERTY

BUILDING CHARACTERISTICS

ELEMENT	CD	CONSTRUCTION
Exterior Wall	05	AVERAGE 100
Roof Structur	03	GABLE/HIP 100
Roof Cover	12	MODULAR MT 100
Interior Wall	05	DRYWALL 100
Interior Floo	12	HARDWOOD 80
Interior Floo	14	CARPET 20
Air Condition	03	CENTRAL 100
Heating Type	04	AIR DUCTED 100
Bedrooms		3 100
Bathrooms		2 100
Frame	01	NONE 100
Stories	1.5	1.5 100
Architectual	05	CONV 100
Units		0 100
Condition Adj	03	03 100
Kitchen Adjus	01	01 100
Quality	05	05
DOR CODE	0100	SINGLE FAMILY
MAP NUM		MKT AREA 06
NEIGHBORHOOD/LOC	850317.00	1.00/

AREA TYPE	TOTAL GROSS AREA	PCT OF BASE	YEAR	TOT ADJ AREA	SUBAREA MARKET VALUE
BAS	1,032	100		1,032	78,839
BAS	1,592	100		1,592	121,620
BAS	1,652	100		1,652	126,204
FGR	432	55		238	18,182
TOTALS	4,708			4,514	344,844

MARKET ADJUSTMENTS

TYPE	MDL	EFF. AREA	TOT ADJ PTS	EFF. BASE RATE	REPL. COST NEW	AYB	EYB	ECON	FNCT		NORM	% COND
0100	01	4,514	104.9370	117.53	530,530	1920	1980	0	0	0	35.00	65.00

1 SINGLE FAM 100% - 2010 Heated Area: 4276 HX Base Yr 2010

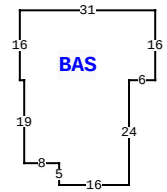

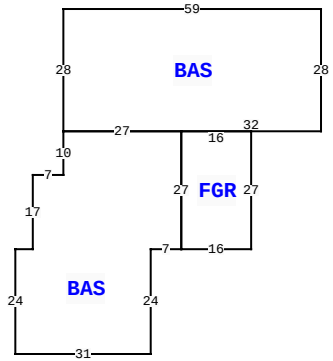

132 SE MEANS ST, LAKE CITY

BLD DATE		LGL DATE	
XF DATE		LAND DATE	
INC DATE		AG DATE	

VALUATION SUMMARY

VALUATION BY		STANDARD
Tax Group: 1	Tax Dist:	
BUILDING MARKET VALUE		344,844
TOTAL MARKET OB/XF VALUE		4,600
TOTAL LAND VALUE - MARKET		19,294
TOTAL MARKET VALUE		368,738
SOH/AGL Deduction		165,477
ASSESSED VALUE		203,261
TOTAL EXEMPTION VALUE	HX HB	50,722
BASE TAXABLE VALUE		152,539
TOTAL JUST VALUE		368,738
NCON VALUE		0
INCOME VALUE		
PREVIOUS YEAR MKT VALUE		368,738

SALE:1:1: 400 SOUTH HERNANDO STREET

PERMIT NUM	DESCRIPTION	AMT	ISSUED
4006	ADDN COMM	75	10/31/2006
3323	ADDN SFR	50	07/07/2005

SALES DATA

OFF RECORD Number	DATE	TYPE INST	Q U	V I	RSN CD	SALE PRICE
1228/0478	12/19/2011	QC	U	I	11	100
GRANTOR: YONG AM & EVA PARK (F						
GRANTEE: YONG AM & EVA PARK						
1135/1990	10/16/2007	WD	Q	I		278,800
GRANTOR: ERROL PARK						
GRANTEE: YONG AM & YOUNG SOO						

BUILDING NOTES

BUILDING DIMENSIONS

BAS= W59 S28 BAS= S10 W7 S17 W4 S24 E31 N24 E7 N27 W27$ E27 FGR= S27 E16 N27 W16$ E32 N28$ PTR= N30 BAS= N24 E6 N16 W31 S16 E1 S19 E8 S5 E16$ S30$.

EXTRA FEATURES

LN	OB/XF CODE	DESCRIPTION	BLD	CAP	L	W	UNITS	UT	Adj R	ADJ UNIT PRICE	ORIG COND	YEAR ON	YEAR ACTUAL	Q	% COND	OB/XF MKT VALUE	NOTES
1	0180	FPLC 1STRY	0	100	0	0	2.00	UT	2,000.00	2,000.00	50	0	0	3	50	2,000	
2	0169	FENCE/WOOD	0	100	0	0	1.00	UT	0.00	0.00	100	2006	2006	3	100	2,000	
3	0166	CONC,PAVMT	0	100	0	0	1.00	UT	0.00	0.00	100	2011	2011	3	100	600	

LAND DESCRIPTION

TOTAL OB/XF 4,600

LN	USE CODE	CLS	LAND USE DESCRIPTION	CAP	RD	LOC ZONE	FRONT	DEPTH	TOT LND UTS	UNIT TYPE	DT	DPTH FACT	% COND	TOT ADJ	UNIT PRICE	ADJ UNIT PRICE	LAND VALUE	OTHER ADJUSTMENTS AND NOTES	YEAR	DENSITY	DECL	FRZ	YR	CONSRV
1	0100	C	SFR	100		CG	105.00	105.00	5,513.00	SF		1.00	1.00	1.00	1.75	1.75	9,648							
2	0100	C	SFR	100		CG	0.00	0.00	5,512.00	SF		1.00	1.00	1.00	1.75	1.75	9,646							

REVIEW DATE 11/07/2016 BY DF Total Acres: 0.25 Total Land Value: 19,294 Market: 0 Agricultural: 0 Common: 19,294 PRINTED 11/18/2025 BY SYS