C DIV: S 1/3 OF LOT OR BLK 54 AL
FT OFF S SIDE BLK 54.

EIKENBERRY MARCUS J/EIKENBERRY LISA RUTH
322 S MARION ST
LAKE CITY, FL 32055

2026

00-00-00-12803-000

COLUMBIA COUNTY PROPERTY

BUILDING CHARACTERISTICS

ELEMENT	CD	CONSTRUCTION
Exterior Wall	04	SINGLE SID 100
Roof Structur	03	GABLE/HIP 100
Roof Cover	03	COMP SHNGL 100
Interior Wall	05	DRYWALL 100
Interior Floo	09	PINE WOOD 100
Air Condition	03	CENTRAL 100
Heating Type	04	AIR DUCTED 100
Bedrooms		4 100
Bathrooms		2 100
Frame	01	NONE 100
Stories	1.5	1.5 100
Architectual	05	CONV 100
Units		0 100
Condition Adj	03	03 100
Kitchen Adjus	01	01 100
Quality	05	05
DOR CODE	0100	SINGLE FAMILY
MAP NUM		MKT AREA 06
NEIGHBORHOOD/LOC	850317.00	1.00/

AREA TYPE	TOTAL GROSS AREA	PCT OF BASE	YEAR	TOT ADJ AREA	SUBAREA MARKET VALUE
BAS	84	100		84	5,185
BAS	2,126	100		2,126	131,225
FCP	289	25		72	4,444
FOP	518	30		155	9,567
FUS	702	100		702	43,330
TOTALS	3,719			3,139	193,751

MARKET ADJUSTMENTS

TYPE	MDL	EFF. AREA	TOT ADJ PTS	EFF. BASE RATE	REPL. COST NEW	AYB	EYB	ECON	FNCT		NORM	% COND
0100	01	3,139	84.7875	94.96	298,079	1900	1900	0	0	0	35.00	65.00

1 SINGLE FAM 100% - 2023 Heated Area: 2912 HX Base Yr 2023

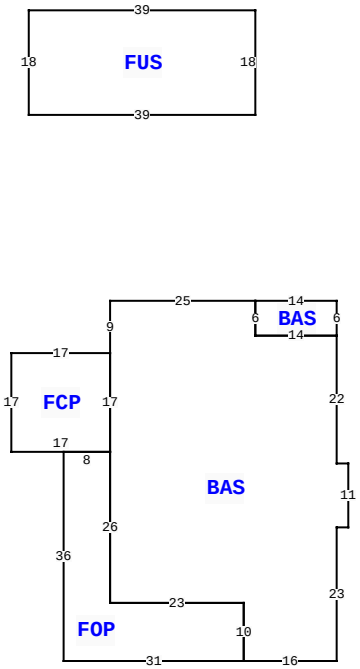

322 S MARION AVE, LAKE CITY

BLD DATE		LGL DATE	
XF DATE		LAND DATE	
INC DATE		AG DATE	

VALUATION SUMMARY

VALUATION BY		STANDARD
Tax Group: 1	Tax Dist:	
BUILDING MARKET VALUE		193,751
TOTAL MARKET OB/XF VALUE		2,000
TOTAL LAND VALUE - MARKET		35,000
TOTAL MARKET VALUE		230,751
SOH/AGL Deduction		9,050
ASSESSED VALUE		221,701
TOTAL EXEMPTION VALUE	HX HB	50,722
BASE TAXABLE VALUE		170,979
TOTAL JUST VALUE		230,751
NCON VALUE		0
INCOME VALUE		
PREVIOUS YEAR MKT VALUE		230,751

PERMIT NUM	DESCRIPTION	AMT	ISSUED
000045352	Roof Replacement	30,129	08/31/2022
1443	DEMOLISH	5	10/07/2009
00000187	REMODEL	15	06/15/1994

SALES DATA

OFF RECORD Number	DATE	TYPE INST	Q U	V I	RSN CD	SALE PRICE
1460/743	2/18/2022	WD	Q	I	01	212,000
GRANTOR: CHEATHAM TERESA L						
GRANTEE: EIKENBERRY MARCUS J						
1407/2598	3/12/2020	QC	U	I	11	100
GRANTOR: JOEL D CHEATHAM						
GRANTEE: TERESA L CHEATHAM						

BUILDING NOTES

BUILDING DIMENSIONS

BAS= W25 S9 FCP= W17 S17 E17N17$ S17 FOP= W8 S36 E31 N10 W23 N26$ S26 E23 S10 E16 N23 E2 N11 W2 N22 BAS= N6 W14 S6 E14$ W14 N6$ PTR=N50 FUS= W39S18 E39 N18$ S50$.

EXTRA FEATURES

LN	OB/XF CODE	DESCRIPTION	BLD	CAP	L	W	UNITS	UT	Adj R	ADJ UNIT PRICE	ORIG COND	YEAR ON	YEAR ACTUAL	Q	% COND	OB/XF MKT VALUE	NOTES
1	0166	CONC,PAVMT	0	100	0	0	1.00	UT	0.00	0.00	100	2016	2016	3	100	200	
2	0296	SHED METAL	0	100	0	0	1.00	UT	0.00	0.00	100	2016	2016	3	100	800	
3	0081	DECKING WI	0	100	0	0	1.00	UT	0.00	0.00	100	2016	2016	3	100	800	
4	0261	PRCH, UOP	0	100	0	0	1.00	UT	0.00	0.00	100	2016	2016	3	100	200	

LAND DESCRIPTION

TOTAL OB/XF 2,000

LN	USE CODE	CLS	LAND USE DESCRIPTION	CAP	RD	LOC ZONE	FRONT	DEPTH	TOT LND UTS	UNIT TYPE	DT	DPTH FACT	% COND	TOT ADJ	UNIT PRICE	ADJ UNIT PRICE	LAND VALUE	OTHER ADJUSTMENTS AND NOTES	YEAR	DENSITY	DECL	FRZ	YR	CONSRV
1	0100	C	SFR	100		*CG	70.00	100.00	14,000.00	SF		1.00	1.00	1.00	2.50	2.50	35,000							

REVIEW DATE 11/21/2022 BY JS Total Acres: 0.32 Total Land Value: 35,000 Market: 0 Agricultural: 0 Common: 35,000 PRINTED 11/18/2025 BY SYS