C DIV: BEG 77 FT S OF NE COR, RU
W 210 FT, N 63 FT E 210 FT TO PO

CASSIDY TIMOTHY PAUL JR/CASSIDY JESSICA ANN
13760 80TH PL
LIVE OAK, FL 32060

2026

00-00-00-12802-000

COLUMBIA COUNTY PROPERTY

BUILDING CHARACTERISTICS

ELEMENT	CD	CONSTRUCTION
Exterior Wall	04	SINGLE SID 100
Roof Structur	08	IRREGULAR 100
Roof Cover	12	MODULAR MT 100
Interior Wall	05	DRYWALL 70
Interior Wall	02	WALL BD/WD 30
Interior Floo	09	PINE WOOD 100
Air Condition	03	CENTRAL 100
Heating Type	04	AIR DUCTED 100
Bedrooms		3 100
Bathrooms		2 100
Frame	01	NONE 100
Stories	2.	2. 100
Architectual	05	CONV 100
Units		0 100
Condition Adj	03	03 100
Kitchen Adjus	01	01 100
Quality	05	05
DOR CODE	2525	BEAUTY PARLOR
MAP NUM		MKT AREA 06
NEIGHBORHOOD/LOC	850317.00	1.00/

AREA TYPE	TOTAL GROSS AREA	PCT OF BASE	YEAR	TOT ADJ AREA	SUBAREA MARKET VALUE
BAS	1,482	100		1,482	115,825
BAS	1,629	100		1,629	127,314
FOP	547	30		164	12,817
UCP	216	20		43	3,361
TOTALS	3,874			3,318	259,316

MARKET ADJUSTMENTS

TYPE	MDL	EFF. AREA	TOT ADJ PTS	EFF. BASE RATE	REPL. COST NEW	AYB	EYB	ECON	FNCT		NORM	% COND
0100	01	3,318	85.8848	96.19	319,158	1910	2010	0	0	0	18.75	81.25

1 SINGLE FAM 0% - 2024 Heated Area: 3111 HX Base Yr

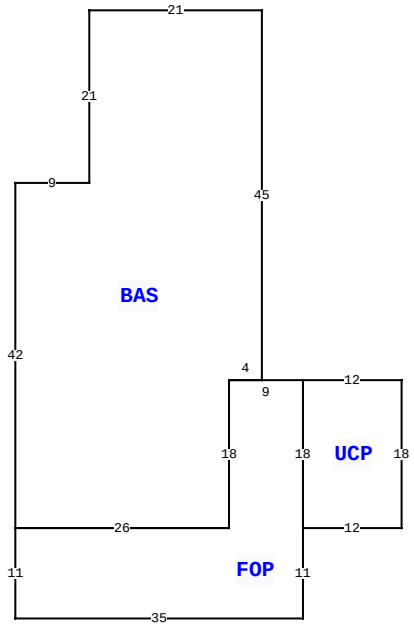

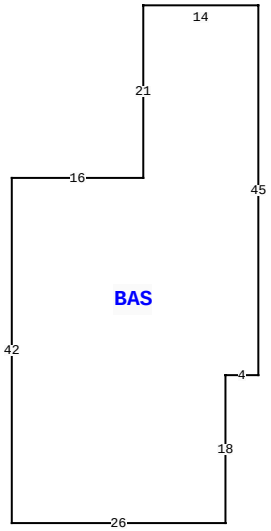

310 S MARION AVE, LAKE CITY

BLD DATE		LGL DATE	
XF DATE		LAND DATE	
INC DATE		AG DATE	

VALUATION SUMMARY

VALUATION BY	STANDARD
Tax Group: 1	Tax Dist:
BUILDING MARKET VALUE	259,316
TOTAL MARKET OB/XF VALUE	1,500
TOTAL LAND VALUE - MARKET	32,500
TOTAL MARKET VALUE	293,316
SOH/AGL Deduction	0
ASSESSED VALUE	293,316
TOTAL EXEMPTION VALUE	0
BASE TAXABLE VALUE	293,316
TOTAL JUST VALUE	293,316
NCON VALUE	0
INCOME VALUE	
PREVIOUS YEAR MKT VALUE	297,305

PERMIT NUM	DESCRIPTION	AMT	ISSUED
000047025	Remodel	15,000	04/20/2023
18-0526	REMODEL	645	09/24/2018
371	MAINT/ALTR	50	07/05/2012

SALES DATA

OFF RECORD Number	DATE	TYPE INST	Q U	V I	RSN CD	SALE PRICE
1482/2249	1/13/2023	WD	Q	I	01	350,000
GRANTOR: DUBON MARIANO B						
GRANTEE: CASSIDY TIMOTHY PAU						
1367/1805	8/27/2018	WD	Q	I	01	130,000
GRANTOR: TIMOTHY MILLER						
GRANTEE: MARIANO B DUBON & A						

BUILDING NOTES

BUILDING DIMENSIONS

BAS= W21 S21 W9 S42 FOP= S11E35N11 UCP= E12 N18 W12 S18$ N18 W9 S18 W26$ E26 N18 E4 N45$ PTR=E80 BAS= W14 S21 W16 S42 E26 N18 E4 N45$ W80$.

EXTRA FEATURES

LN	OB/XF CODE	DESCRIPTION	BLD	CAP	L	W	UNITS	UT	Adj R	ADJ UNIT PRICE	ORIG COND	YEAR ON	YEAR ACTUAL	Q	% COND	OB/XF MKT VALUE	NOTES
1	0166	CONC,PAVMT	0	0	0	0	1.00	UT	0.00	0.00	100	2016	2016	3	100	1,500	

LAND DESCRIPTION

TOTAL OB/XF 1,500

LN	USE CODE	CLS	LAND USE DESCRIPTION	CAP	RD	LOC ZONE	FRONT	DEPTH	TOT LND UTS	UNIT TYPE	DT	DPTH FACT	% COND	TOT ADJ	UNIT PRICE	ADJ UNIT PRICE	LAND VALUE	OTHER ADJUSTMENTS AND NOTES	YEAR	DENSITY	DECL	FRZ	YR	CONSRV
1	2525	C	BEAUTYPRLR	0		*CG	65.00	100.00	13,000.00	SF		1.00	1.00	1.00	2.50	2.50	32,500							

REVIEW DATE 11/21/2023 BY mark Total Acres: 0.30 Total Land Value: 32,500 Market: 0 Agricultural: 0 Common: 32,500 PRINTED 11/18/2025 BY SYS